GATE ACCESSORIES

umakov®

2021/2022

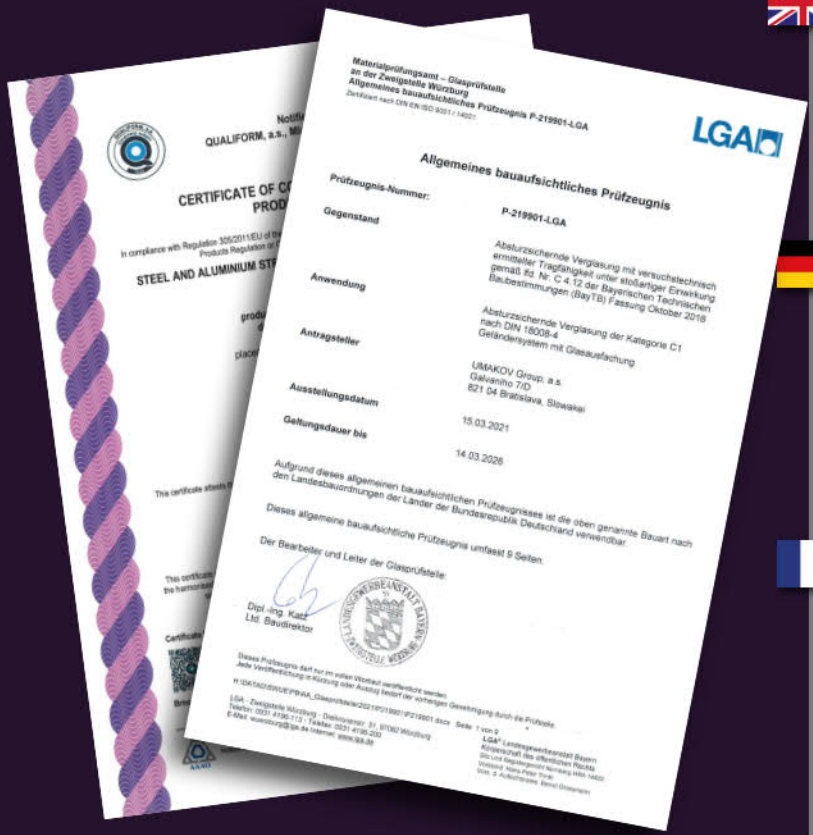

Materialprüfungsamt – Glasprüfstelle
an der Zweigstelle Würzburg
Allgemeines bauaufsichtliches Prüfzeugnis P-219901-LGA

LGA

Allgemeines bauaufsichtliches Prüfzeugnis

Prüfzeugnis-Nummer:	P-219901-LGA
Gegenstand	Absturzsichernde Verglasung mit versuchstechnisch ermittelter Tragfähigkeit unter stoßartiger Einwirkung gemäß lfd. Nr. C 4.12 der Bayerischen Technischen Baubestimmungen (BayTB) Fassung Oktober 2018
Anwendung	Absturzsichernde Verglasung der Kategorie C1 nach DIN 18008-4 Geländersystem mit Glasauffachung
Antragsteller	UMAKOV Group, a.s. Galvaniho 7/D 821 04 Bratislava, Slowakei
Ausstellungsdatum	15.03.2021
Geltungsdauer bis	14.03.2026

Aufgrund dieses allgemeinen bauaufsichtlichen Prüfzeugnisses ist die oben genannte Bauart nach den Landesbauordnungen der Länder der Bundesrepublik Deutschland verwendbar.

Dieses allgemeine bauaufsichtliche Prüfzeugnis umfasst 9 Seiten.

Der Bearbeiter und Leiter der Glasprüfstelle:

Dipl.-Ing. Katz
Ltd. Baudirektor

Spoločnosť UMAKOV už viac ako 30 rokov vyrába a predáva komponenty pre nerezové a sklenené zábradlia.
Spoločnosť má širokú sieť partnerov a pobočiek na Slovensku, v Ceskej republike, Poľsku a Maďarsku. Má vlastnú produkciu, obchod a administratívu na ploche viac ako 25 000 m².
Vysoká kvalita, rýchle doručenie, viac ako 5000 druhov komponentov na sklade a profesionálna technická podpora robí v súčasnosti z UMAKOV-u jedného z lídrov Európskeho trhu v predaji komponentov pre zábradlia.
Naše portfólio obsahuje sklenené systémy, prístrešky, schody, bránové príslušenstvo a kované komponenty.

Przez ponad 25 lat firma UMAKOV produkuje i sprzedaje elementy ze stali nierdzewnej oraz składniki dla balustrad szklanych
Działalność firmy Umakov jest realizowana w ich własnych oddziałach oraz sieciach partnerów na Słowacji, w Czechach, Polsce i na Węgrzech. Firma posiada również własną produkcję, przestrzenie handlowe oraz administracyjne o łącznej powierzchni około 25.000 m².
Najwyższa jakość, szybka dostawa, ponad 5000 typów komponentów na magazynie oraz profesjonalne wsparcie techniczne sprawia z firmy UMAKOV jednego z liderów na rynku europejskim w sprzedaży elementów do balustrad nierdzewnych.
Nasza oferta obejmuje również systemy szklane, zadaszenia, schody, bramy oraz elementy kute.

Az UMAKOV több, mint 25 éve gyárt és értékesít rozsdamentes acél-, és üvegkorlát elemeket.
Az UMAKOV üzleti tevékenységét saját leányvállalatain és partner hálózatain keresztül gyakorolja Szlovákiában, Csehországban, Lengyelországban és Magyarországon.
A cég saját gyártási tevékenysége, kereskedelmi és adminisztratív központja mintegy 25 000 m² alapterületen helyezkedik el.
Csúcs minőség, gyors szállítás, több, mint 5000 raktárkészleten lévő termék, valamint professzionális műszaki támogatás teszik az UMAKOV-ot ma Európa egyik vezető vállalatává a korlát elemek területén.
Választékunkban megtalálhatók még üveg rendszerek, előtetők, lépcsők, kapütechnika és kovácsoltvas termékek.

For over 25 years UMAKOV has produced and sold components for stainless steel and glass railings.
Umakov business activities are carried out in their own branches and network of partners in Slovakia, Czech Republic, Poland and Hungary. Company also owns their own production, commercial and administrative spaces with total area of about 25 000 m².
Top quality, fast delivery, over 5000 types of components in stock and professional technical support makes UMAKOV today one of Europe's market leaders in railing components.
Our portfolio also includes glass systems, canopies, stairs, gate accesories and forged components.

Firma UMAKOV produziert und verkauft die Komponente für Edelstahl- und Glasgeländer schon länger als 25 Jahren.
UMAKOV hat Partnern und Filialen in der Slowakei, in der Tschechischen Republik, in Polen und Ungarn. Das Unternehmen verfügt über eigene Produktion, Geschäft und Betriebsverwaltung auf der Fläche von ca 25 000 m².
Hohe Qualität, schnelle Lieferung, mehr als 5000 Arten von Komponenten auf dem Lager und professionelle technische Unterstützung , das alles macht von UMAKOV einer der europäischen Marktführer im Verkauf von Komponenten für Geländer.
Unser Portfolio umfasst Glassysteme, Vordachsysteme, Treppen, Tor Zubehör und Schmiedeteile.

Depuis plus de 25 ans UMAKOV produit et vend des composants pour les garde-corps inox et verre.
La société UMAKOV dispose d'un réseau de filiales et partenaires en Slovaquie, République Tchèque, Pologne et Hongrie. Ella possède ses propres espaces de production, de vente, au sein de son siège administratif, d'une surface d'environ 25 000 m².
Haute qualité, livraison rapide, plus de 5000 types de composants en stock et une assistance technique professionnelle, font aujourd'hui d'UMAKOV un des leaders européens dans le secteur des composants de garde-corps.
Notre gamme comprend également des systèmes en verre, auvents, escaliers, accessoires pour portails et pièces forgées.

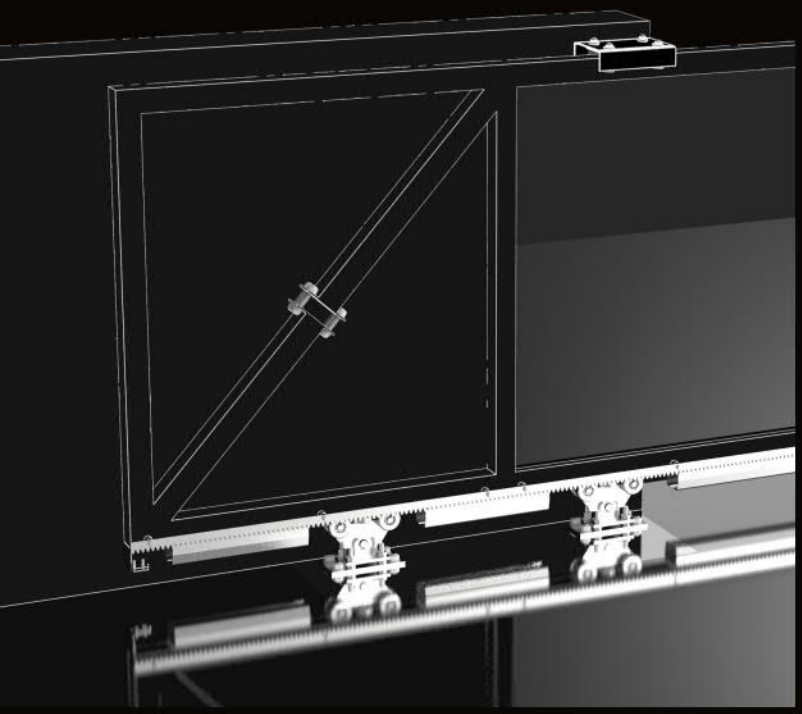

1 SAMONOSNÉ BRÁNY CANTILEVER GATES

4

2 POSUVNÉ BRÁNY - PRÍSLUŠENSTVO SLIDING GATES - ACCESORIES

24

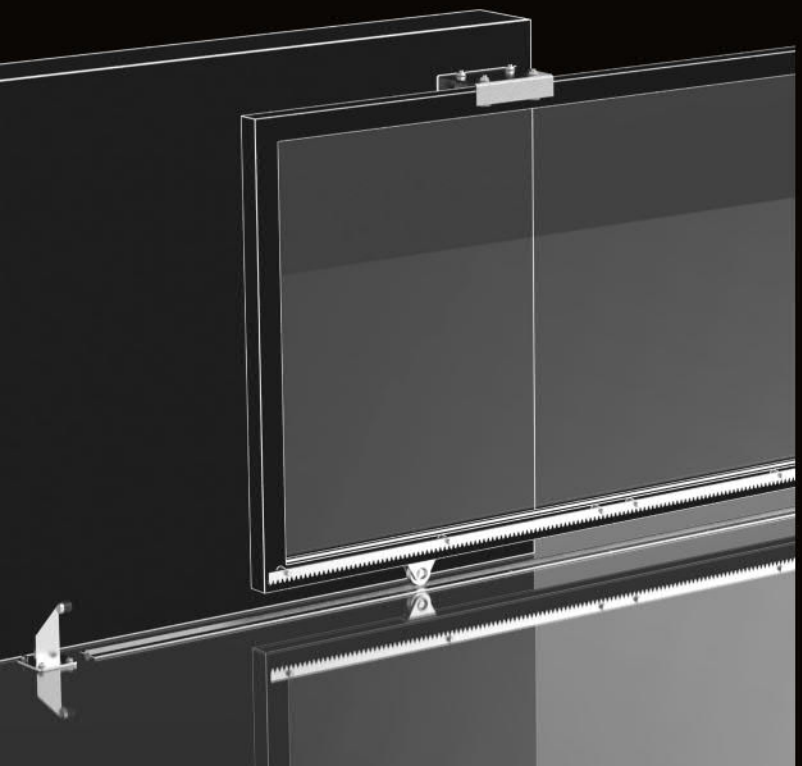

3 KOLIESKOVÉ BRÁNY ROLLING GATES

40

4 ZÁVESNÉ BRÁNY
HANGING GATES

46

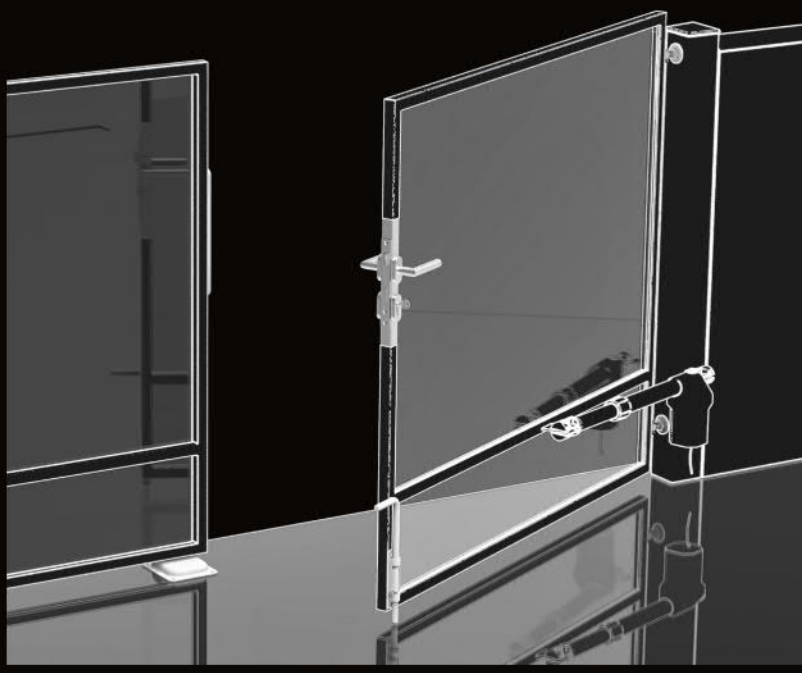

5 KRÍDLOVÉ BRÁNY
SWING GATES

54

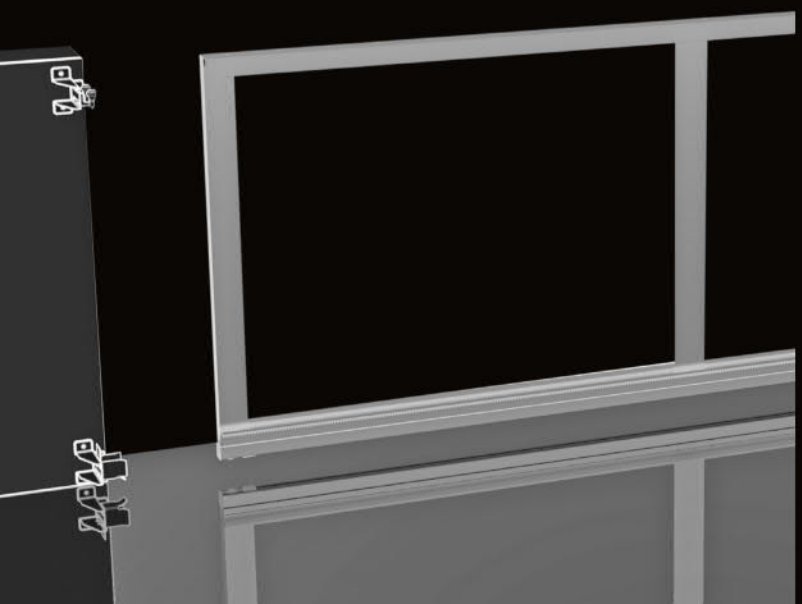

6 HLINÍKOVÉ BRÁNY
ALUMINIUM GATES

102

1 SAMONOSNÉ BRÁNY
CANTILEVER GATES

SETY
SETS

PROFILY
PROFILES

VOZÍKY
CARRIAGES

PRÍSLUŠENSTVO
ACCESSORIES

TELESKOPICKÉ BRÁNY
TELESCOPIC GATES

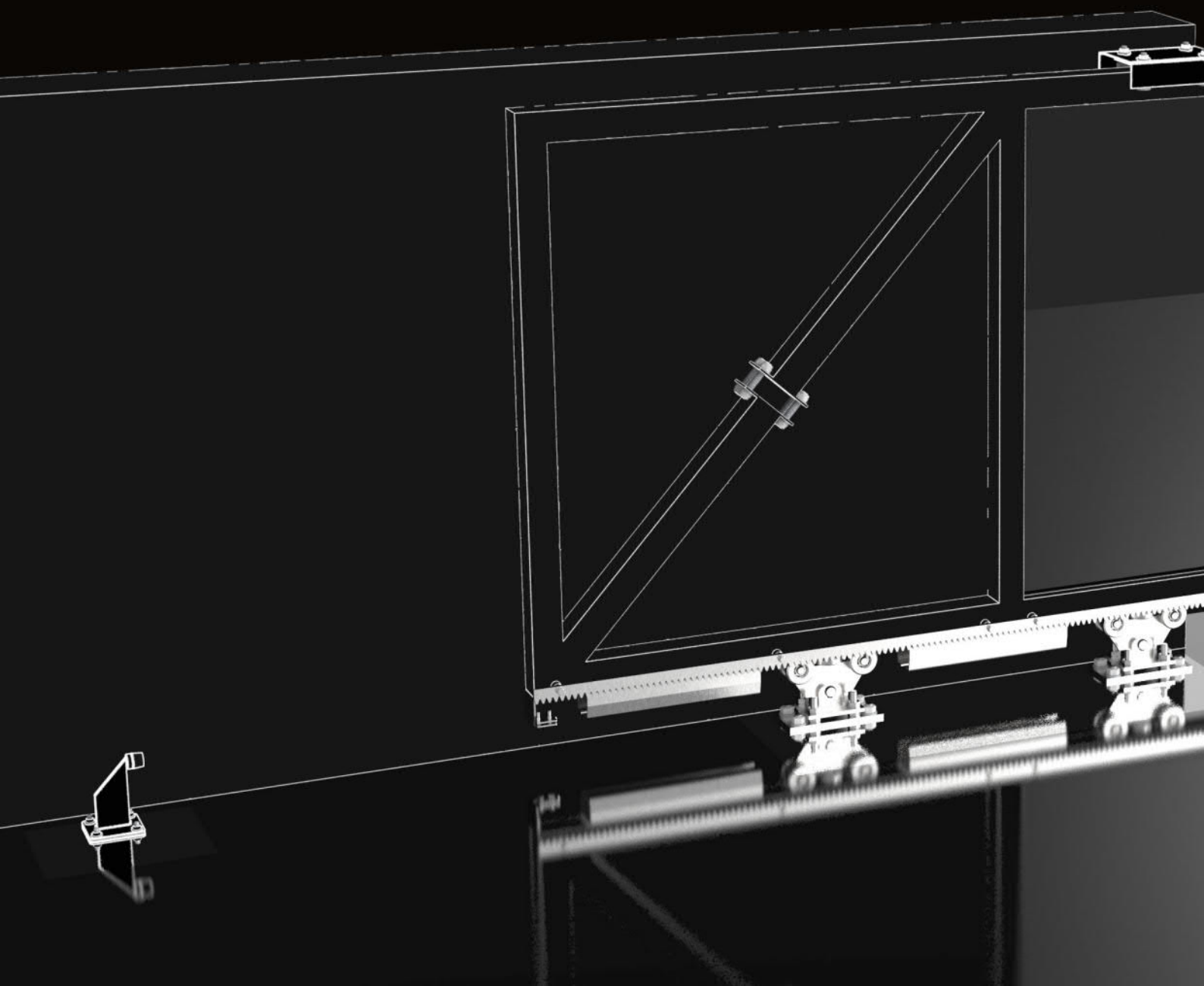

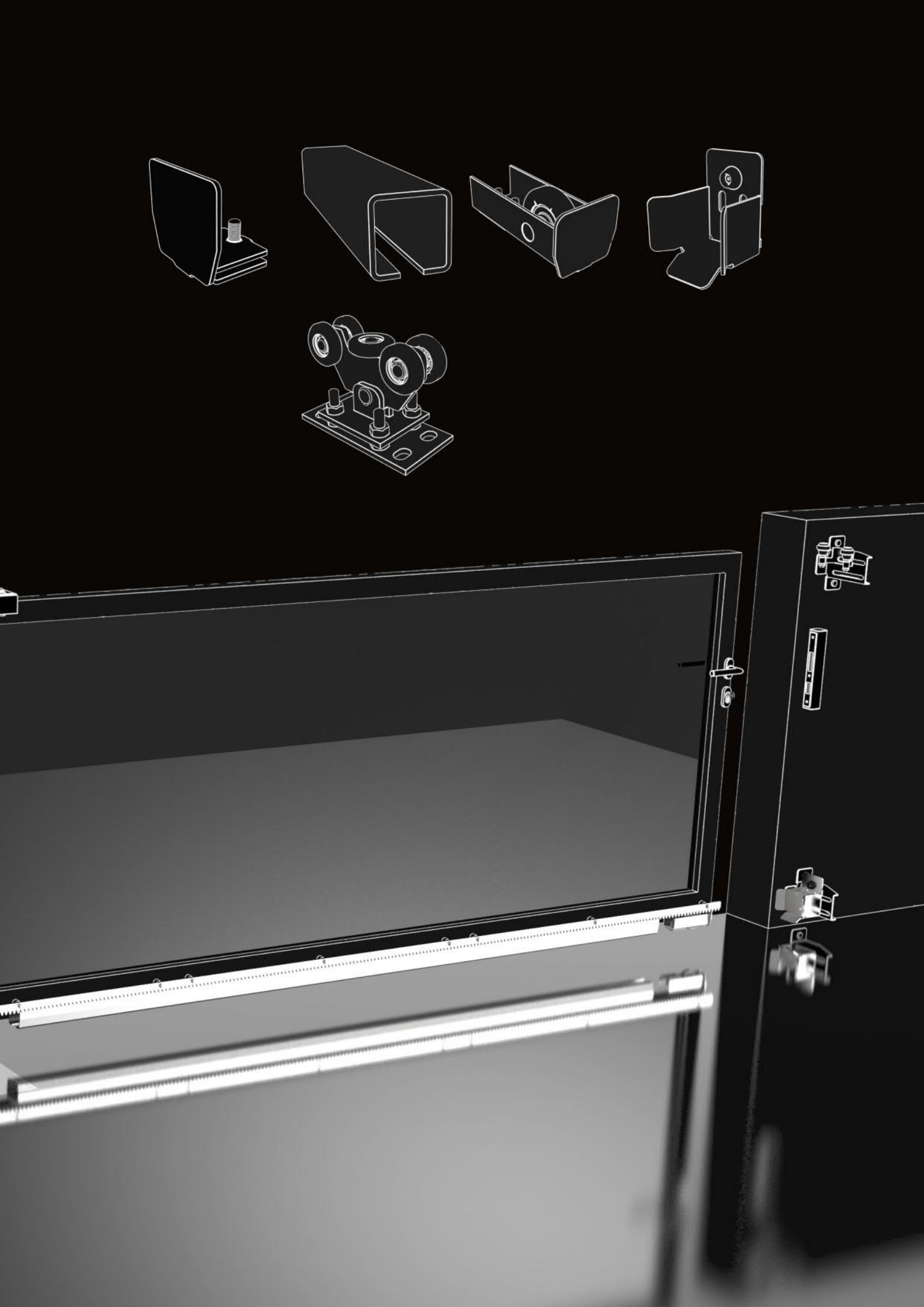

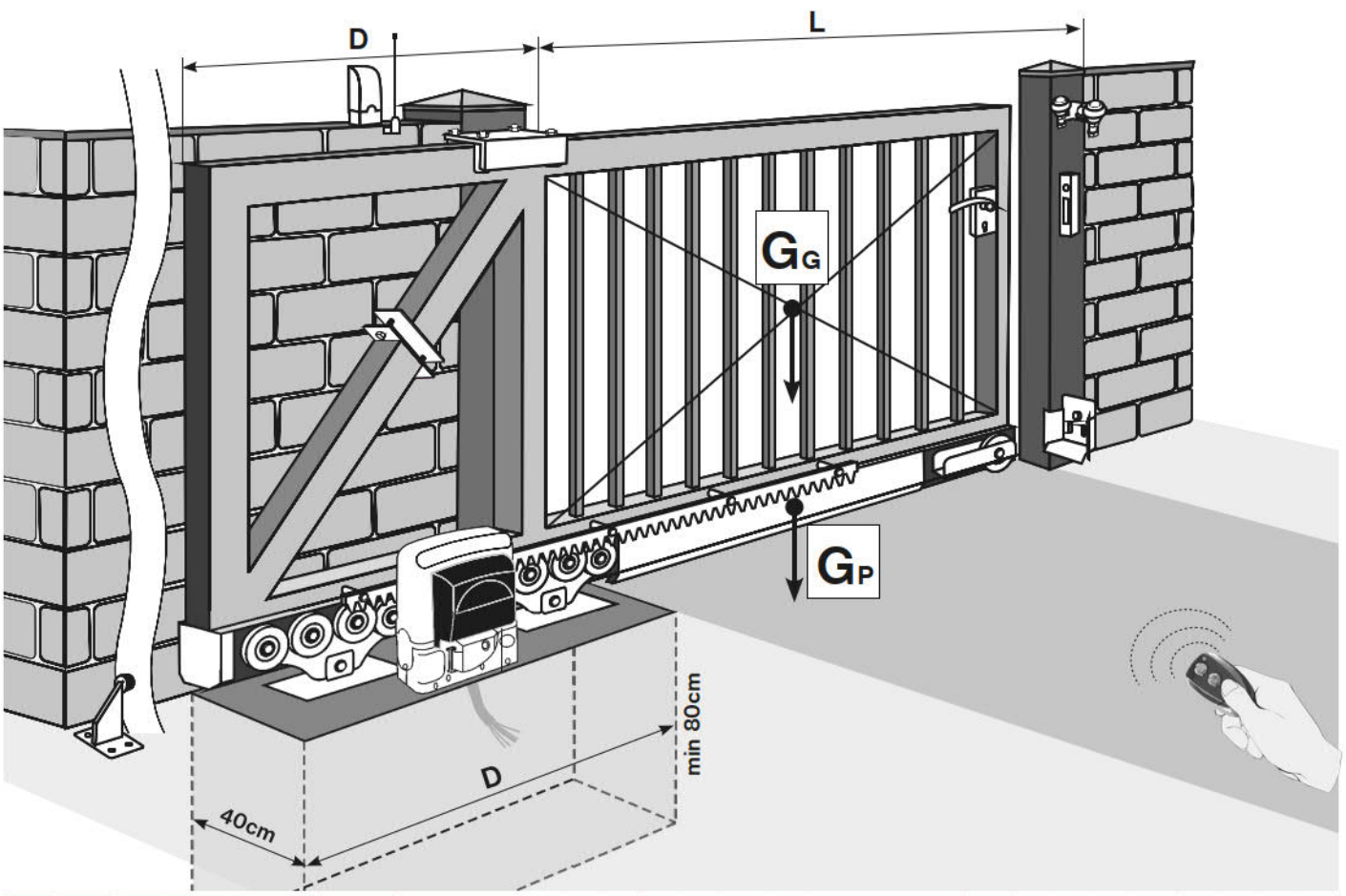

L (cm)	GG (kg) G=GG +GP	60x60					70x60		70x70						80x80								83x97	94x85				136x142			
		SV-60x60 clasic-NYLON	SV-60x60Zn clasic-NYLON	SV-60x60 inox-clasic	SV-60x60 clasic	SV-60x60Zn clasic	SV-70x60 clasic	SV-70x60Zn clasic	SV-70x70 clasic-NYLON	SV-70x70Zn clasic-NYLON	SV-70x70 clasic	SV-70x70Zn clasic	SV-70x70BP clasic	SV-70x70BP-Zn clasic	SV-80x80 clasic-NYLON	SV-80x80Zn clasic-NYLON	SV-80x80 clasic	SV-80x80BP clasic	SV-80x80BP-Zn clasic	SV-80x80 heavy	SV-80x80Zn heavy	SV-80x80 inox-clasic	SV-83x79-AL	SV-94x85 clasic	SV-94x85Zn clasic	SV-94x85 heavy	SV-94x85Zn heavy	SV-136x142 clasic	SV-136x142Zn clasic	SV-136x142 heavy	SV-136x142Zn heavy
		D (cm)																													
300	105	119	77	83					111	84													94								
300	150	156	96	109					138	102													121								
350	125	147	91	101					134	97					113	87			100		83		113								
350	175	212	120	139					168	123					153	99			109		90		151								
400	140	174	107	121					156	111					134	100			110		95		150	107							
400	200	290	150	177					214	150					196	116			120		105		190	119	132						
450	160		129	148					185	131					164	114			120		103		182	119	131						
450	225		187	226					277	182					250	135			133		122		240	137	142						
500	175		151	177					213	151					194	125			122		108		189	129	134						
500	250		232	290					350	221					320	159			146		143		304	157	153			134			
550	200		187	224						180					237	138			135		125			139	145			140			
550	275		289	370						270					370	186			161		165			180	165			144			
600	210		212	256						205					281	151			189		140			151	155			152			
600	300		360							328					450	218			178		185			207	179			156		207	
650	240		270							254						181			163		161			176	166			166		197	
650	325		430							400						255			195		233			238	193			168		218	
700	250															198			175		179			192	175			175		204	
700	350															297			214		275			274	209			181		229	
750	270															227			189		215			216	187			194		213	
750	375															347			235		322			315	225			196		241	
800	400															404			257		370			361	243			212		254	
800	600																		418						362			313		312	
900	675																		555						459			393		362	
1000	750																								582			493		425	
1100	825																											617		499	
1200	900																											774		586	
1300	1000																											850		716	

Orientačné rozmery pre privátne použitie G=GG+GP (GG = hmotnosť brány bez samonosného profilu)/Approximate dimensions for private using

	Goptimal (Gmax.)				
	200 (400) kg	**300** (600) kg	**400** (800) kg	**600** (1200) kg	**>600** (1800) kg
	300 (400) kg	**400** (600) kg	**550** (800) kg	**800** (1200) kg	**>800** (1800) kg
ROLLkit	DRIFT-40-SMART	DRIFT-80-SMART			
NICE price	ROAD-400 ROBUS400-BDKIT	ROX-600	ROBUS600-BDKIT	ROBUS-1000 ROX-1000	RUN1800-ZKIT THOR-1500
CAME	BX-PLUS-AGS-ZKIT BXV-4-ZKIT	BX-STRONG-AGS-ZKIT BXV-8-ZKIT		BKS-1200	BKS-1800 BKS-2200
KEY	TURBO50-ZKIT-R	TURBO80-ZKIT-R			

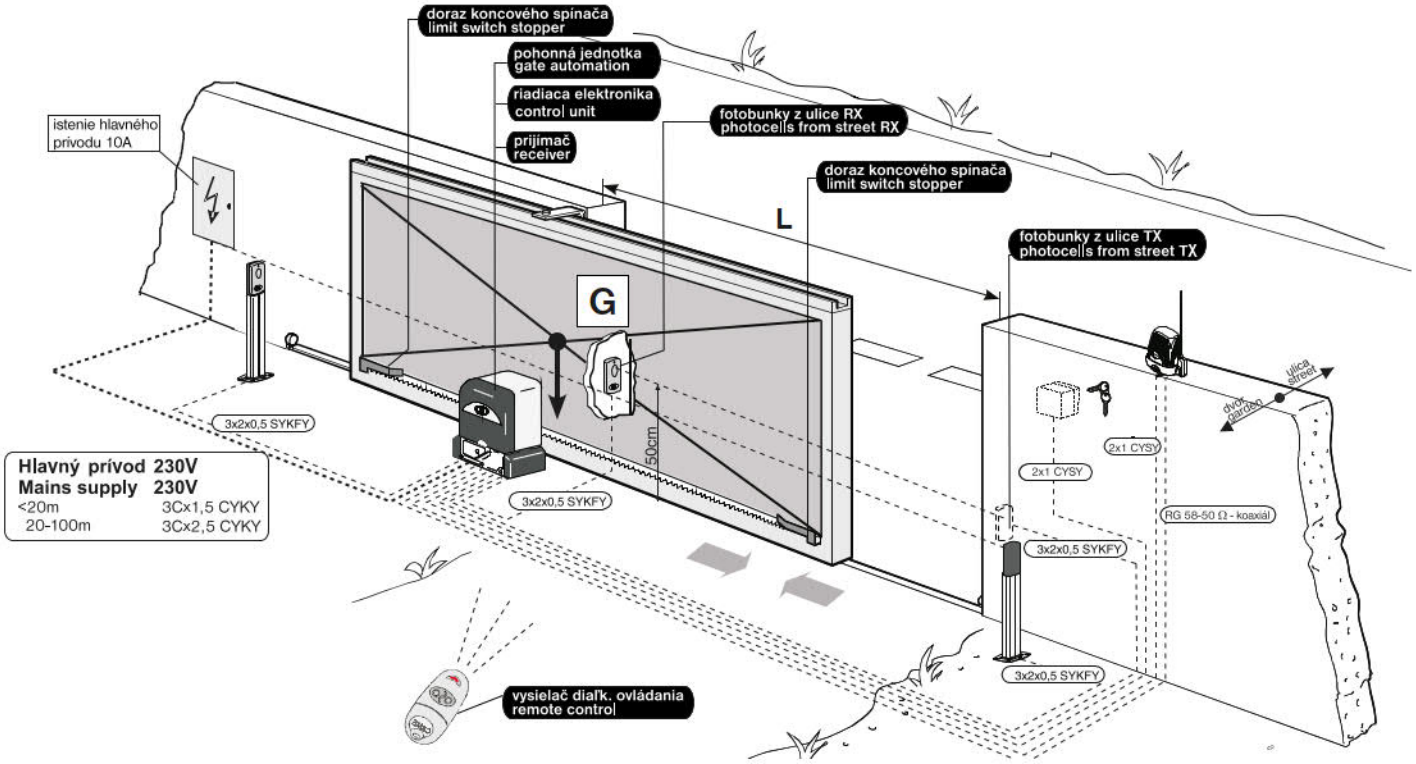

MODEL Fe/Zn 60x60 L4m/G$_G$150kg						
	H/34BP-4-60x60-NYLON	H/14N-60x60	H/15P-60	H/258-60x60	H/02-60x60-Fe-6000	H/02-60x60-Zn-6000
SV-60x60 ECO-NYLON	2x	1x	1x	1x	-	-
SV-60x60 clasic-NYLON	2x	1x	1x	1x	1x	-
SV-60x60Zn clasic-NYLON	2x	1x	1x	1x	-	1x

new

MODEL Fe/Zn 60x60 L4m/G$_G$200kg						
	H/34BP-4-60x60	H/14N-60x60	H/15P-60	H/258-60x60	H/02-60x60-Fe-6000	H/02-60x60-Zn-6000
SV-60x60-ECO	2x	1x	1x	1x	-	-
SV-60x60 clasic	2x	1x	1x	1x	1x	-
SV-60x60Zn clasic	2x	1x	1x	1x	-	1x

MODEL INOX 60x60 L4m/G$_G$250kg					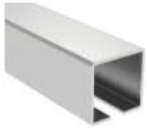
	H8/34-4-60x60	H8/14N-60x60	H8/15P-60	H8/40-60x60	H8/02-60x60-6000
SV-60x60-ECO-INOX	2x	1x	1x	1x	-
SV-60x60inox-clasic	2x	1x	1x	1x	1x

MODEL Fe/Zn 70x60 L4m/G$_G$200kg					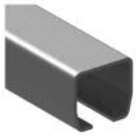	
	H/34B-4-70x60	H/14N-70x60	H/15P-70	H/40-70x60P	H/02-70x60-Fe-6000	H/02-70x60-Zn-6000
SV-70x60-ECO	2x	1x	1x	1x	-	-
SV-70x60 clasic	2x	1x	1x	1x	1x	-
SV-70x60Zn clasic	2x	1x	1x	1x	-	1x

MODEL Fe/Zn 70x70 L4m/G$_G$175kg						
	H/34-4-70x70-NY-LON	H/14N-70x70	H/15P-70	H/258-70x70	H/02-70x70-Fe-6000	H/02-70x70-Zn-6000
SV-70x70-ECO-NYLON	2x	1x	1x	1x	-	-
SV-70x70 clasic-NYLON	2x	1x	1x	1x	1x	-
SV-70x70Zn clasic-NYLON	2x	1x	1x	1x	-	1x

new

MODEL Fe/Zn 70x70 L4m/GG250kg							
	H/34BP-4-70x70	H/14N-70x70	H/15P-70	H/258-70x70	H/02-70x70-Fe-6000	H/02-70x70-Zn-6000	M16X30
SV-70x70BP-ECO *new*	2x	1x	1x	1x	-	-	8x
SV-70x70BP clasic	2x	1x	1x	1x	1x	-	8x
SV-70x70BP-Zn clasic	2x	1x	1x	1x	-	1x	8x

MODEL Fe/Zn 70x70 L4m/GG250kg						
	H/34-4-70x70P	H/14N-70x70	H/15P-70	H/258-70x70	H/02-70x70-Fe-6000	H/02-70x70-Zn-6000
SV-70x70-ECO	2x	1x	1x	1x	-	-
SV-70x70 clasic	2x	1x	1x	1x	1x	-
SV-70x70Zn clasic	2x	1x	1x	1x	-	1x

MODEL Fe/Zn 80x80 L4m/GG200kg							
	H/34-4-80x80-NYLON	H/14N-80x80	H/15P-80	H/258-80x80	H/02-80x80-Fe-6000	H/02-80x80-Zn-6000	
SV-80x80-ECO-NYLON	2x	1x	1x	1x	-	-	*new*
SV-80x80 clasic-NYLON	2x	1x	1x	1x	1x	-	
SV-80x80Zn clasic-NYLON	2x	1x	1x	1x	-	1x	

MODEL Fe/Zn 80x80 L4,5m/GG250kg							
	H/34BP-4-80x80	H/14N-80x80	H/15P-80	H/258-80x80	H/02-80x80-Fe-6000	H/02-80x80-Zn-6000	M16x30
SV-80x80BP-ECO	2x	1x	1x	1x	-	-	8x
SV-80x80BP clasic	2x	1x	1x	1x	1x	-	8x
SV-80x80BP-Zn clasic	2x	1x	1x	1x	-	1x	8x

MODEL Fe/Zn 80x80 L4,5m/GG250kg							
	H/34-4-80x80P	H/14N-80x80	H/15P-80	H/258-80x80	H/02-80x80-Fe-6000	H/02-80x80-Zn-6000	
SV-80x80-ECO	2x	1x	1x	1x	-	-	*top*
SV-80x80 clasic	2x	1x	1x	1x	1x	-	
SV-80x80Zn clasic	2x	1x	1x	1x	-	1x	

MODEL INOX 80x80 L4,5m/GG300kg					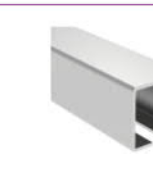
	H8/34-4-80x80	H8/14N-80x80	H8/15P-80	H8/40-80x80	H8/02-80x80-6000
SV-80x80-ECO-INOX	2x	1x	1x	1x	-
SV-80x80inox-clasic	2x	1x	1x	1x	1x

MODEL Fe/Zn 80x80 L7m/GG300kg								
	H/34-8-80x80 -HEAVY	H/14N-80x80	H/15P-80	H/258-80x80	H/02-80x80 -Fe-3000	H/02-80x80 -Fe-6000	H/02-80x80 -Zn-3000	H/02-80x80 -Zn-6000
SV-80x80-ECO-HEAVY	2x	1x	1x	1x	-	-	-	-
SV-80x80 heavy	2x	1x	1x	1x	1x	1x	-	-
SV-80x80Zn heavy	2x	1x	1x	1x	-	-	1x	1x

MODEL Al 83x79 L4m/GG200kg					
	SV-83x79-AL-ECO				H/02-83x79-AL-6000
SV-83x79-AL-ECO	2x	1x	1x	1x	-
SV-83x79-AL	2x	1x	1x	1x	1x

MODEL Fe/Zn 94x85 L6m/GG300kg								
	H/34B-4-94x85	H/14N-94x85	H/15P-100	H/40-94x85P	H/02-94x85 -Fe-3000	H/02-94x85 -Fe-6000	H/02-94x85 -Zn-3000	H/02-94x85 -Zn-6000
SV-94x85-ECO	2x	1x	1x	1x	-	-	-	-
SV-94x85 clasic	2x	1x	1x	1x	1x	1x	-	-
SV-94x85Zn clasic	2x	1x	1x	1x	-	-	1x	1x

MODEL Fe/Zn 94x85 L8m/GG500kg					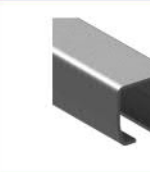	
	H/34B-8-94x85-HEAVY	H/14N-94x85	H/15P-100	H/40-94x85P	H/02-94x85-Fe-6000	H/02-94x85-Zn-6000
SV-94x85-ECO-HEAVY	2x	1x	1x	1x	-	-
SV-94x85 heavy	2x	1x	1x	1x	2x	-
SV-94x85Zn heavy	2x	1x	1x	1x	-	2x

MODEL Fe/Zn 136x142 L9m/GG600kg						
	H/34B-4-136x142	H/14N-136x142	H/15P-145	H/40-136x142P	H/02-136x142-Fe-6000	H/02-136x142-Zn-6000
SV-136x142-ECO	2x	1x	1x	1x	-	-
SV-136x142 clasic	2x	1x	1x	1x	2x	-
SV-136x142Zn clasic	2x	1x	1x	1x	-	2x

MODEL Fe/Zn 136x142 L11m/GG800kg					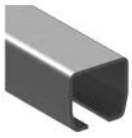			
	H/34B-8-136x142 -HEAVY	H/14N-136x142	H/15P-145	H/40-136x142P	H/02-136x142 -Fe-3000	H/02-136x142 -Fe-6000	H/02-136x142 -Zn-3000	H/02-136x142 -Zn-6000
SV-136x142-ECO-HEAVY	2x	1x	1x	1x	-	-	-	-
SV-136x142 heavy	2x	1x	1x	1x	1x	2x	-	-
SV-136x142Zn heavy	2x	1x	1x	1x	-	-	1x	2x

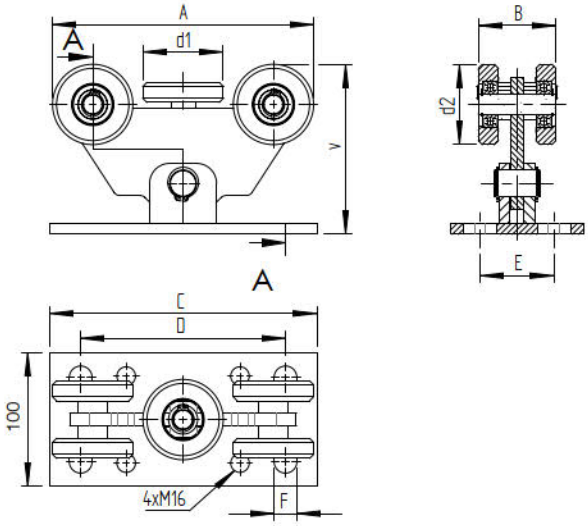

	Quality	Finish	v	d1	d2	A	B	C	D	E	F
H/34BP-4-60x60	Fe	Zn	128	50	50	165	44	145	115	60	13
H/34BP-4-60x60-NYLON											
H8/34-4-60x60	AISI304	raw									
H/34BP-4-70x70	Fe	Zn	130	60	60	195	58	200	152	55	17
H/34BP-4-80x80			132	68	68	203	61	200	152	56	18

new

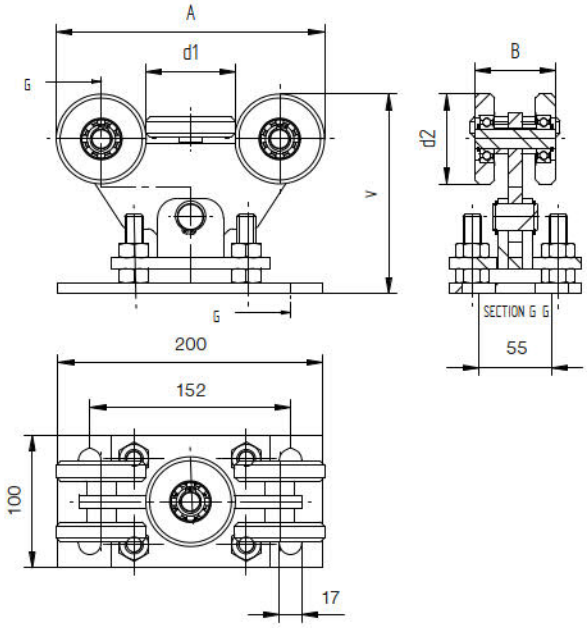

	Quality	Finish	v	v max	d1	d2	A	B
H/34-4-70x70P	Fe	Zn	150	170	60	60	195	58
H/34-4-70x70-NYLON								
H/34-4-80x80P			151	171	68	68	203	61
H/34-4-80x80-NYLON								
H8/34-4-80x80	AISI304	raw						

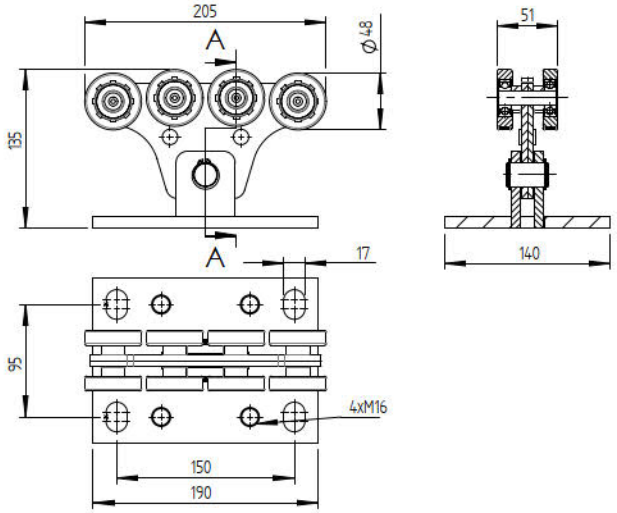

	Quality	Finish
H/34B-4-70x60	Fe	Zn

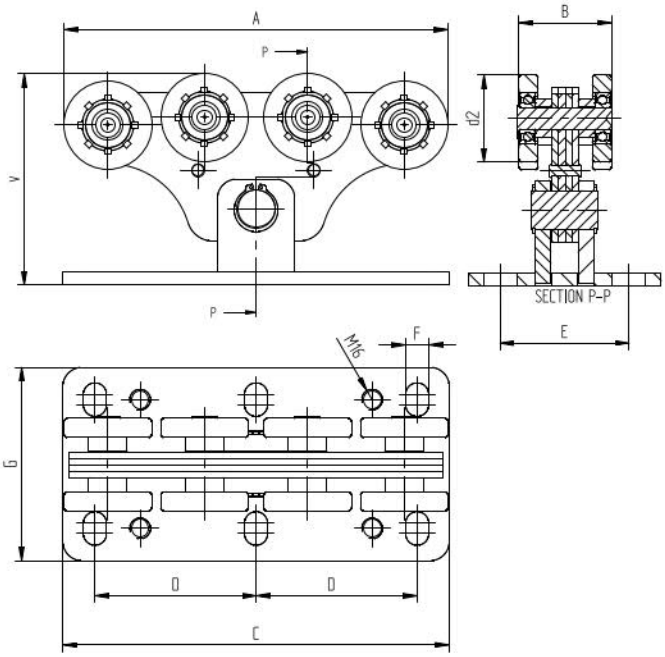

	Quality	Finish	v	d2	A	B	C	D	E	F	G
H/34B-4-94x85	Fe	Zn	164	68	298	72	300	125	104	18	150
H/34B-4-136x142			263	113	470	103	470	210	150	17	200

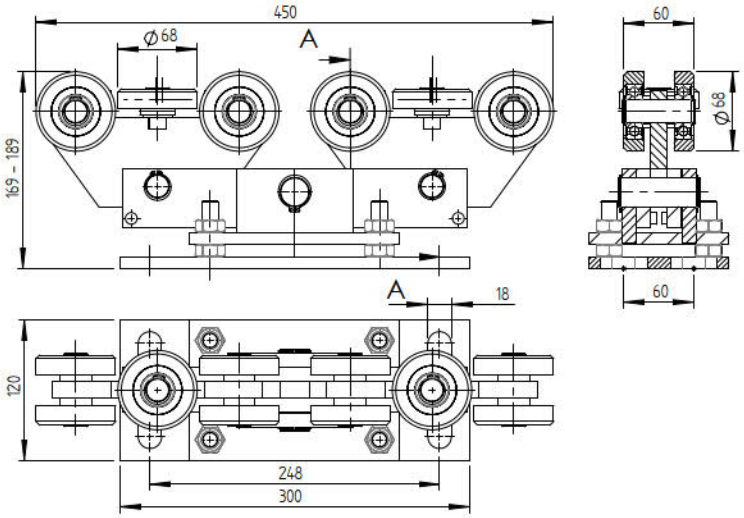

	Quality	Finish
H/34-8-80x80-HEAVY	Fe	Zn

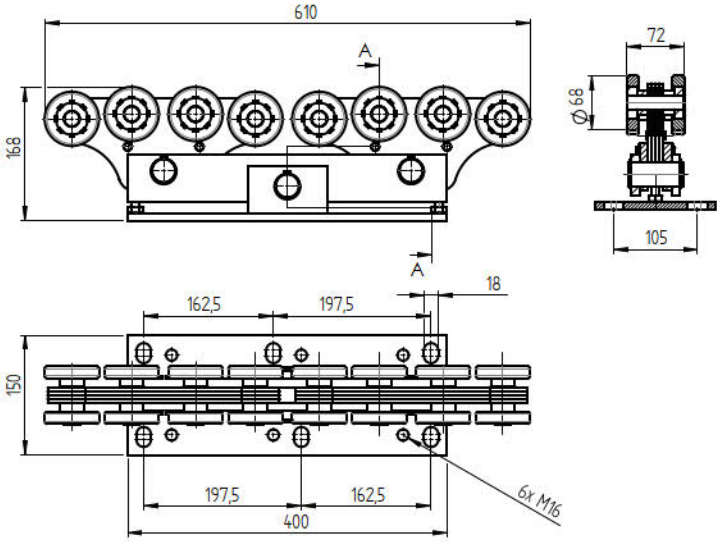

	Quality	Finish
H/34B-8-94x85-HEAVY	Fe	Zn

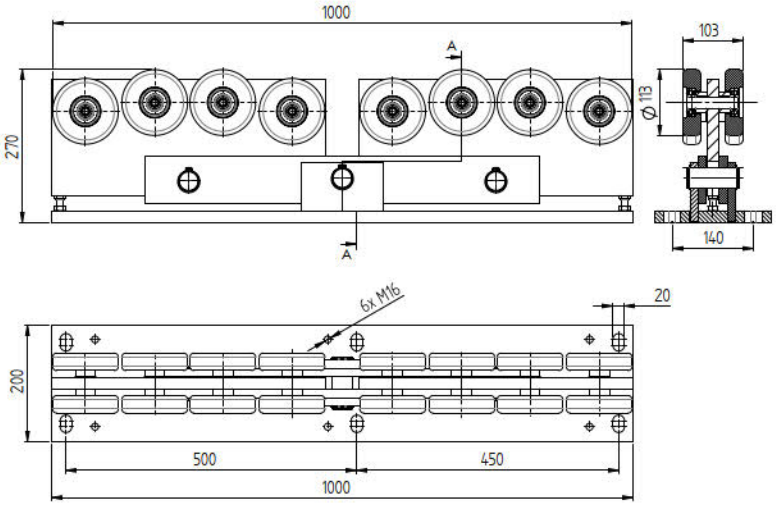

	Quality	Finish
H/34B-8-136x142-HEAVY	Fe	Zn

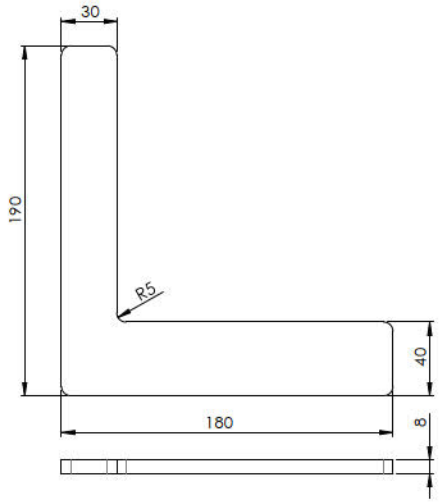

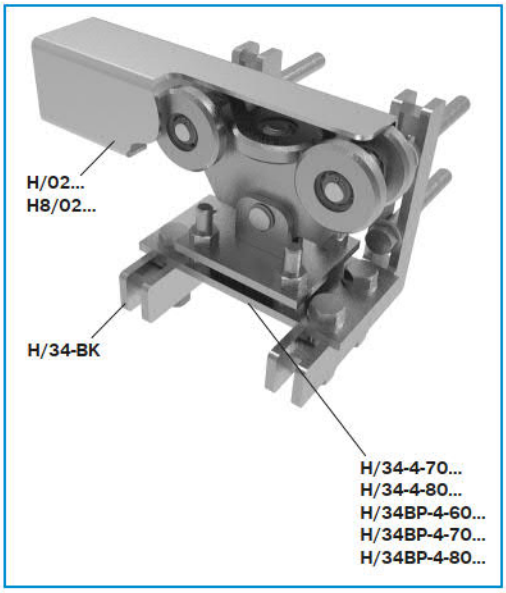

	Quality	Finish
H/34-BK	Fe	raw

new

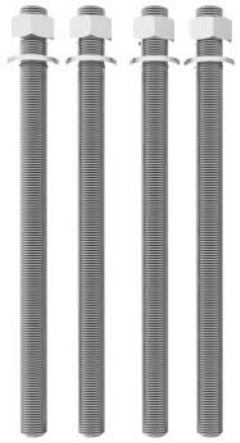

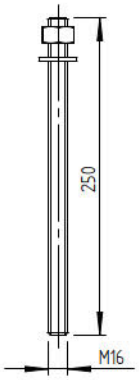

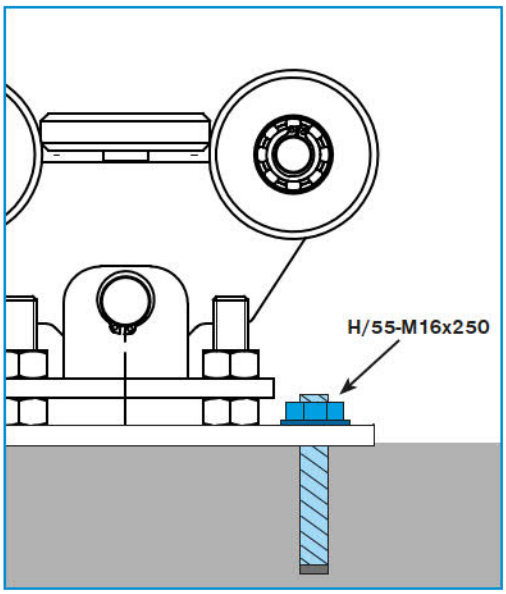

	Quality	Finish
H/55-M16x250	Fe	Zn

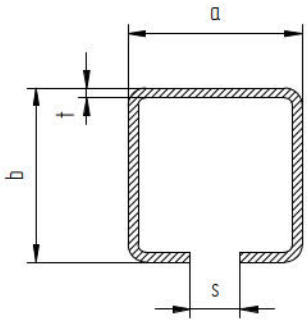

	Quality	Finish	a	b	t	s	L	
H/02-60x60-Fe-3000	Fe	raw	60	60	4	15	3000	
H/02-60x60-Fe-6000							6000	
H/02-60x60-Zn-3000		Zn					3000	
H/02-60x60-Zn-6000							6000	
H/02-70x70-Fe-3000		raw	70	70	4	20	3000	
H/02-70x70-Fe-6000							6000	
H/02-70x70-Zn-3000		Zn					3000	
H/02-70x70-Zn-6000							6000	
H/02-80x80-Fe-3000		raw	80	80	5	25	3000	
H/02-80x80-Fe-6000							6000	top
H/02-80x80-Zn-3000		Zn	78	78	4	20	3000	
H/02-80x80-Zn-6000							6000	top
H/02-80x80-Zn-7000							7000	
H8/02-60x60-3000	AISI304	raw	58	58	3	15	3000	
H8/02-60x60-6000							6000	
H8/02-80x80-3000			76	76		20	3000	
H8/02-80x80-6000							6000	

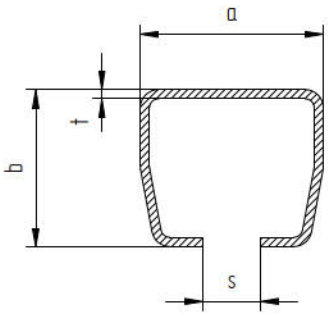

	Quality	Finish	a	b	t	s	L
H/02-70x60-Fe-3000	Fe	raw	70	60	3,5	22	3000
H/02-70x60-Fe-6000							6000
H/02-70x60-Zn-3000		Zn					3000
H/02-70x60-Zn-6000							6000
H/02-94x85-Fe-3000		raw	94	85	5	33	3000
H/02-94x85-Fe-6000							6000
H/02-94x85-Zn-3000		Zn					3000
H/02-94x85-Zn-6000							6000
H/02-136x142-Fe-3000		raw	136	142	6	38	3000
H/02-136x142-Fe-6000							6000
H/02-136x142-Zn-3000		Zn					3000
H/02-136x142-Zn-6000							6000

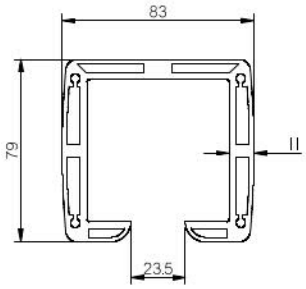

	Quality	Finish	L	
H/02-83x79-Al-3000	ALUMINIUM	raw	3000	new
H/02-83x79-Al-6000			6000	

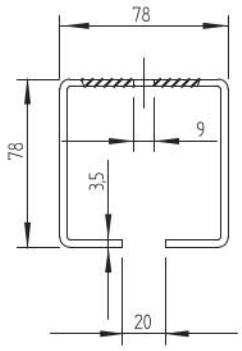

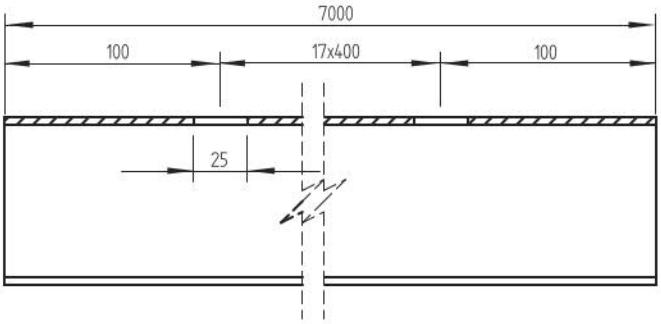

	Quality	Finish
H/02-80x80-Zn-D-7000	Fe	Zn

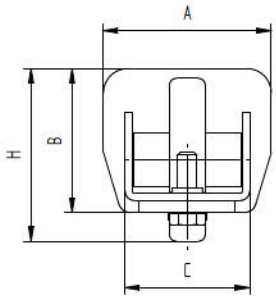

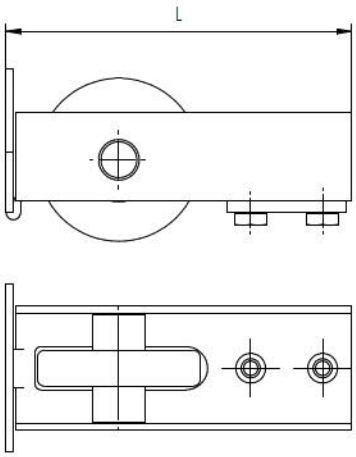

	Quality	Finish	A	B	C	H	L
H/14N-70x60	Fe	Zn	70	60	52	72	144
H/14N-94x85			94	85	66	96	143
H/14N-136x142			138	142	112	161	198

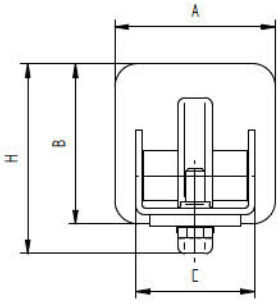

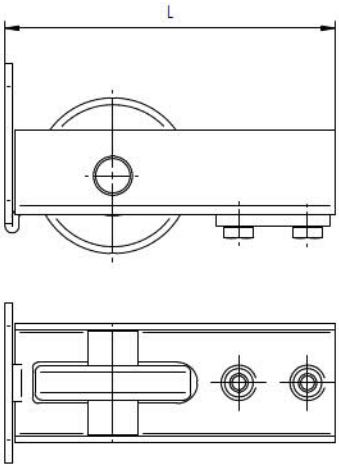

	Quality	Finish	A	B	C	H	L
H/14N-60x60	Fe	Zn	60	60	51	72	143
H8/14N-60x60	AISI304	raw					
H/14N-70x70	Fe	Zn	70	70	52	83	144
H/14N-80x80			80	80	61	92	149
H8/14N-80x80	AISI304	raw	76	76			

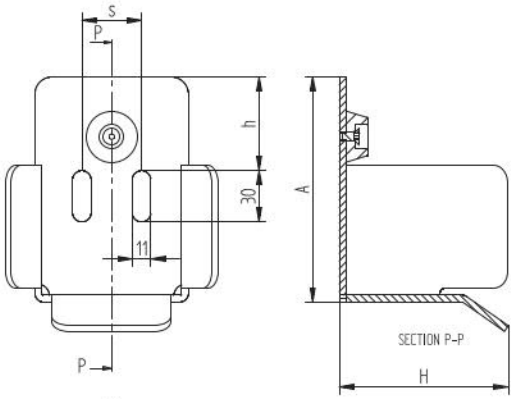

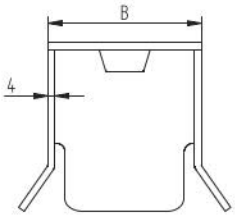

	Quality	Finish	A	B	h	s	H
H/15P-60	Fe	Zn	130	74	56	31	102
H8/15P-60	AISI304	raw					
H/15P-70	Fe	Zn		90	55	35	100
H/15P-80			135	98	55	35	95
H8/15P-80	AISI304	raw					
H/15P-100	Fe	Zn	170	108	65	50	108
H/15P-145			225	150	75	80	105

H/16-46x130
H8/16-46x130

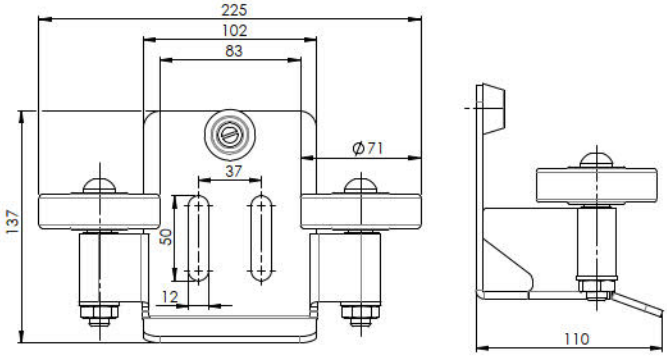

H/16-46x130
H8/16-46x130

	Quality	Finish
H/15P-80-NYLON	Fe	Zn

new

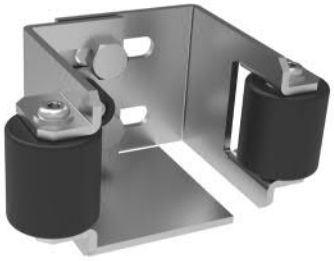

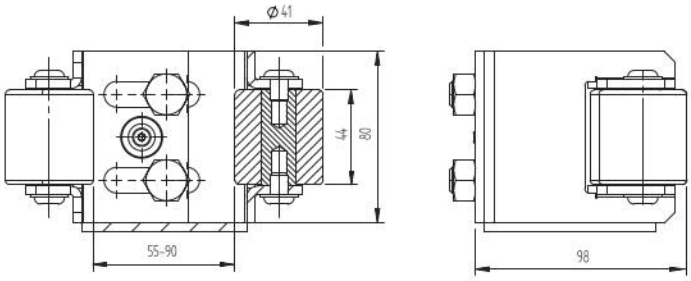

H/16-46x130
H8/16-46x130

	Quality	Finish
H/15P-55-90	Fe	Zn

new

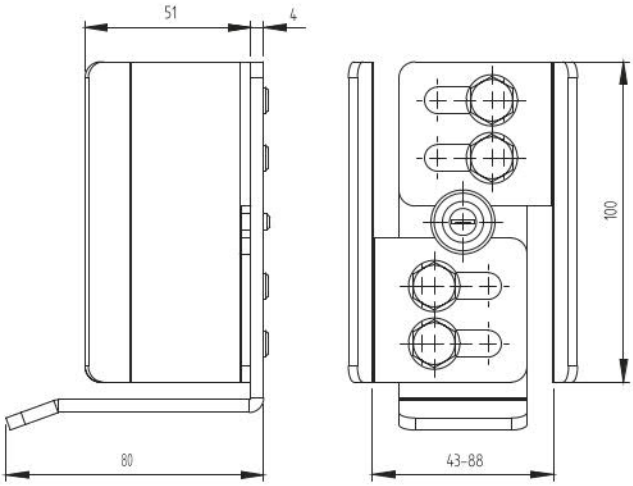

	Quality	Finish
H/11	Fe	Zn

new

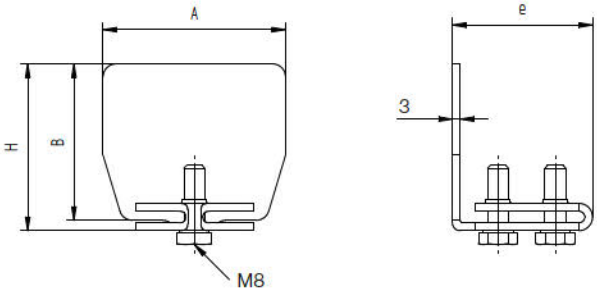

	Quality	Finish	A	B	H	e
H/40-70x60P	Fe	Zn	70	60	64	53
H/40-94x85P			94	85	87	53
H/40-136x142P			136	142	142	89

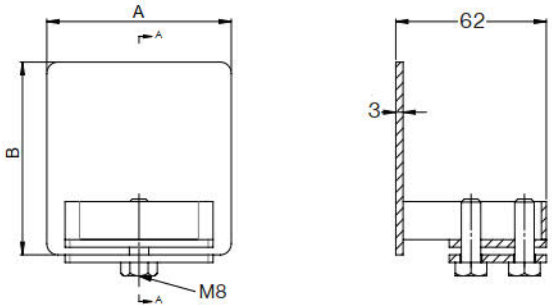

	Quality	Finish	A	B
H8/40-60x60	AISI304	raw	60	60
H/40-70x70P	Fe	Zn	70	70
H/40-80x80P			80	80
H8/40-80x80	AISI304	raw	76	76

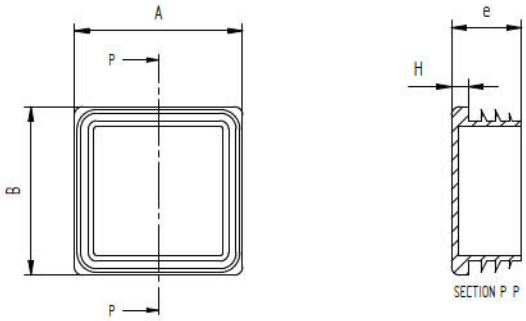

	Quality	Finish	A	B	H
E2/258-40x40	PVC	Black	40	40	4,8
E2/258-50x50			50	50	2
H/258-60x60			60	60	6
H/258-70x70			70	70	
H/258-80x80			80	80	

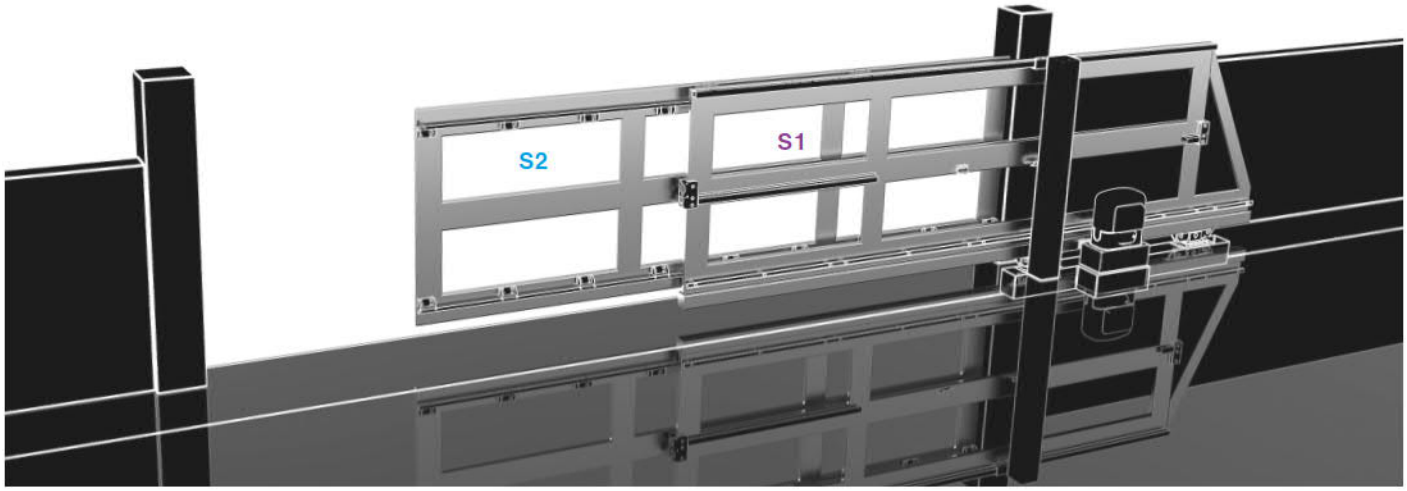

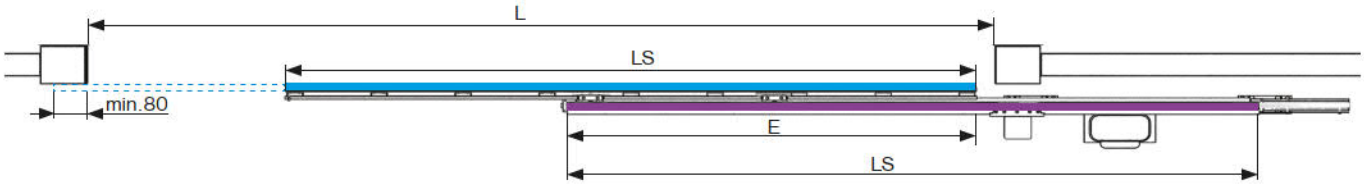

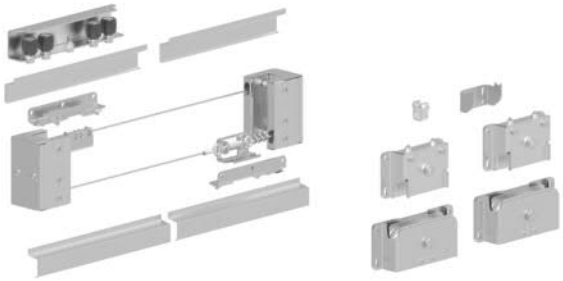

	Quality	Finish	max L	TS-CS8-ECO	LV-2C8-250-ECO
TS-C2-8	Fe	Zn	8000	1x	1x

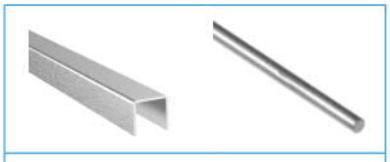

U/40x40x3-3M U/40x40x3-6M	A/20-6000

L	LS	E	max S2 (kg)
3500	2690	900	250
4000	3060	1020	
4500	3440	1150	
5000	3810	1270	
5500	4190	1400	
6000	4560	1520	
6500	4940	1650	
7000	5310	1770	
7500	5690	1900	
8000	6060	2020	

WWW

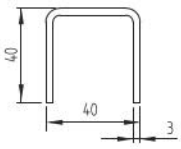

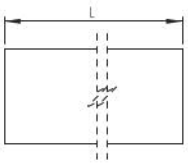

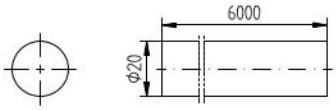

	Quality	Finish	L
U/40x40x3-3M	Fe	raw	3000
U/40x40x3-6M			6000

	Quality	Finish
A/20-6000	AISI304	raw

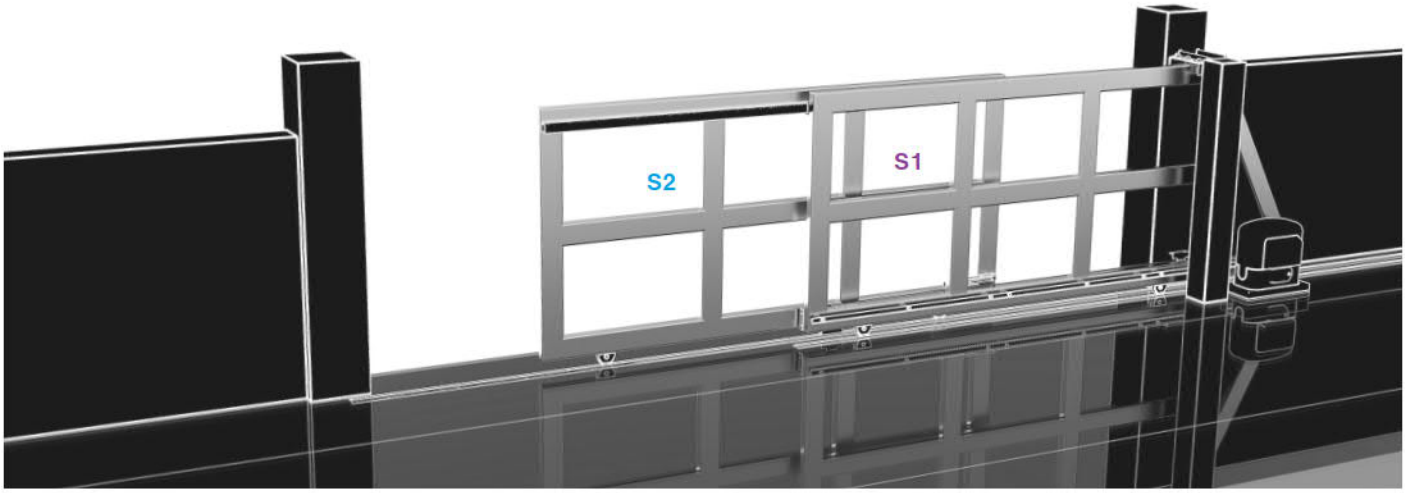

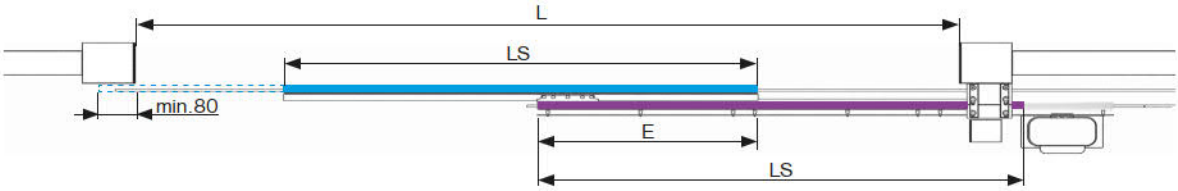

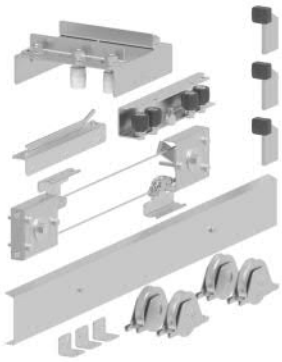

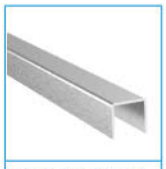

U/40x40x3-3M
U/40x40x3-6M

	Quality	Finish	max L
TS-S2-4	Fe	Zn	4000
TS-S2-8			8000
TS-S2-15			15000

L	LS	min E	max S2 (kg)
3000	1890	350	300
4000	2390		
5000	2890		
6000	3390		
7000	3890		
8000	4390		
9000	5140	600	400
10000	5640		
11000	6140		
12000	6640		
13000	7140		
14000	7640		
15000	8140		

WWW

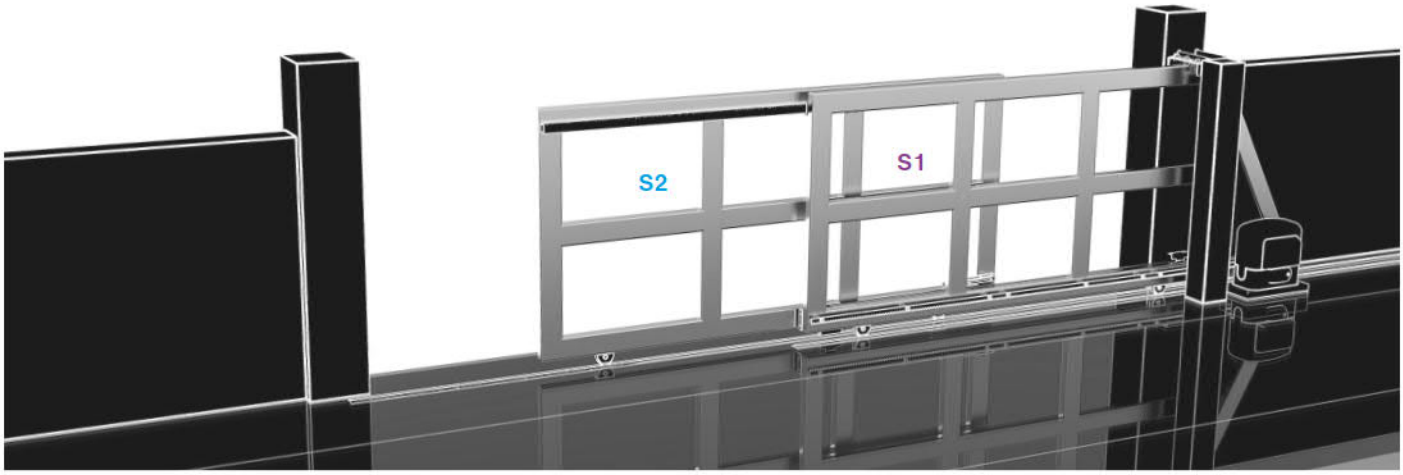

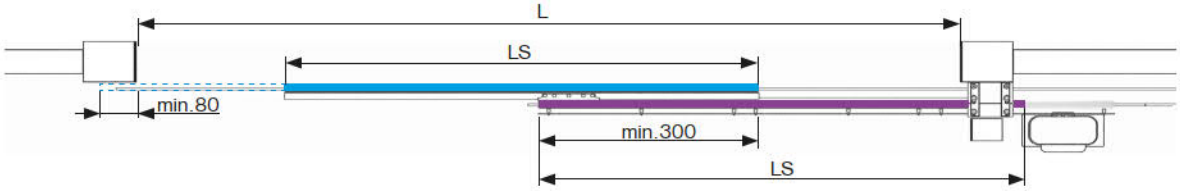

	Quality	Finish	max L
TS-S2-4-U	Fe	Zn	4000

new

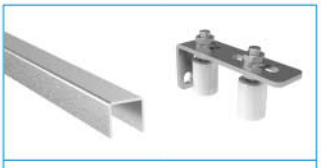

U/40x40x3-3M	H/12...
U/40x40x3-6M	H/53...

L	LS	max S2 (kg)
3000	1800	200
3500	2050	
4000	2300	

WWW

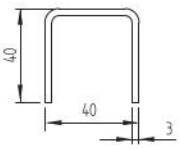

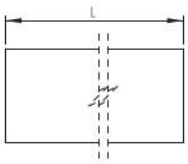

	Quality	Finish	L
U/40x40x3-3M	Fe	raw	3000
U/40x40x3-6M			6000

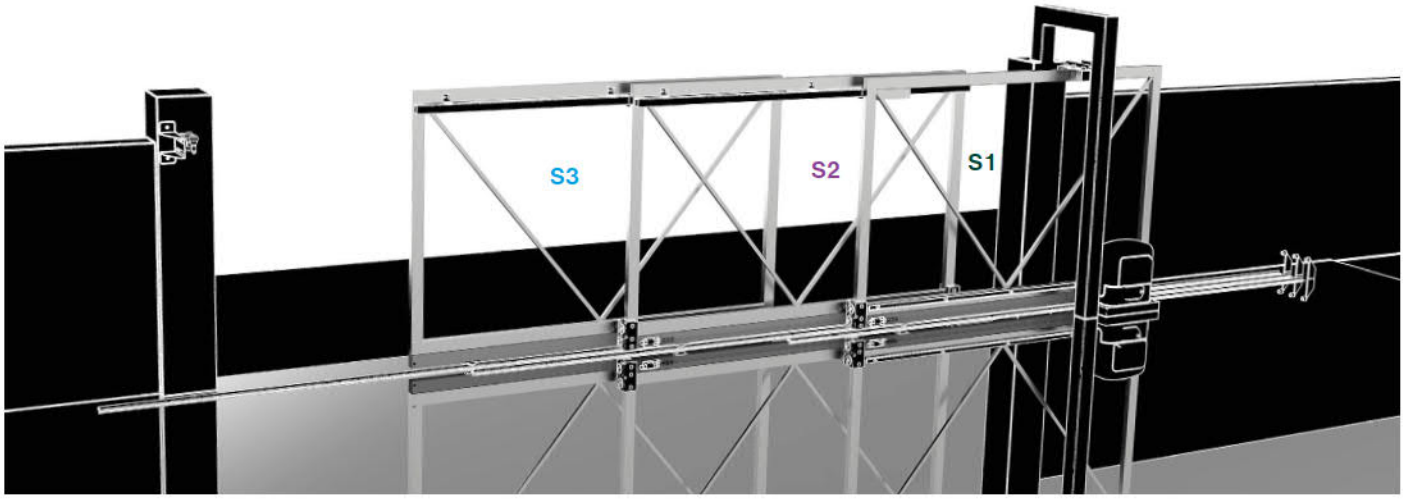

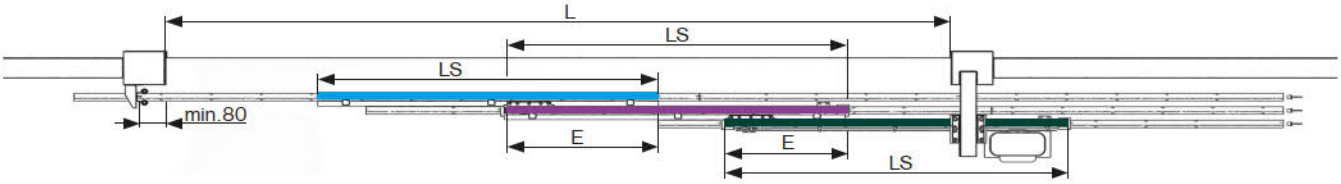

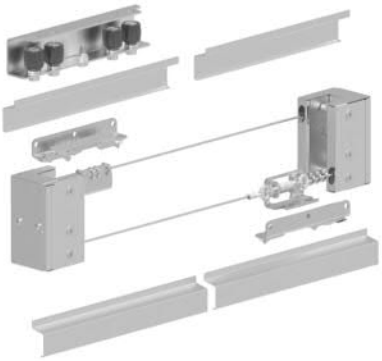

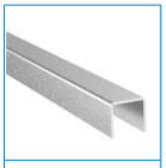

U/40x40x3-3M
U/40x40x3-6M

	Quality	Finish	max L	TS-CS8-ECO
TS-S3-15	Fe	Zn	15000	2x

L	LS	min E	max S2, S3 (kg)
3000	1380		
4000	1710		
5000	2040	350	
6000	2380		
7000	2710		
8000	3040		
9000	3630		200
10000	3960		
11000	4290		
12000	4630	600	
13000	4960		
14000	5290		
15000	5630		

WWW

2 POSUVNÉ BRÁNY - PRÍSLUŠENSTVO
SLIDING GATES - ACCESORIES

HORNÉ VEDENIA
UPPER GUIDE BRACKETS

DORAZY
STOPPERS

ZÁMKY
LOCKS

HREBENE
RACKS

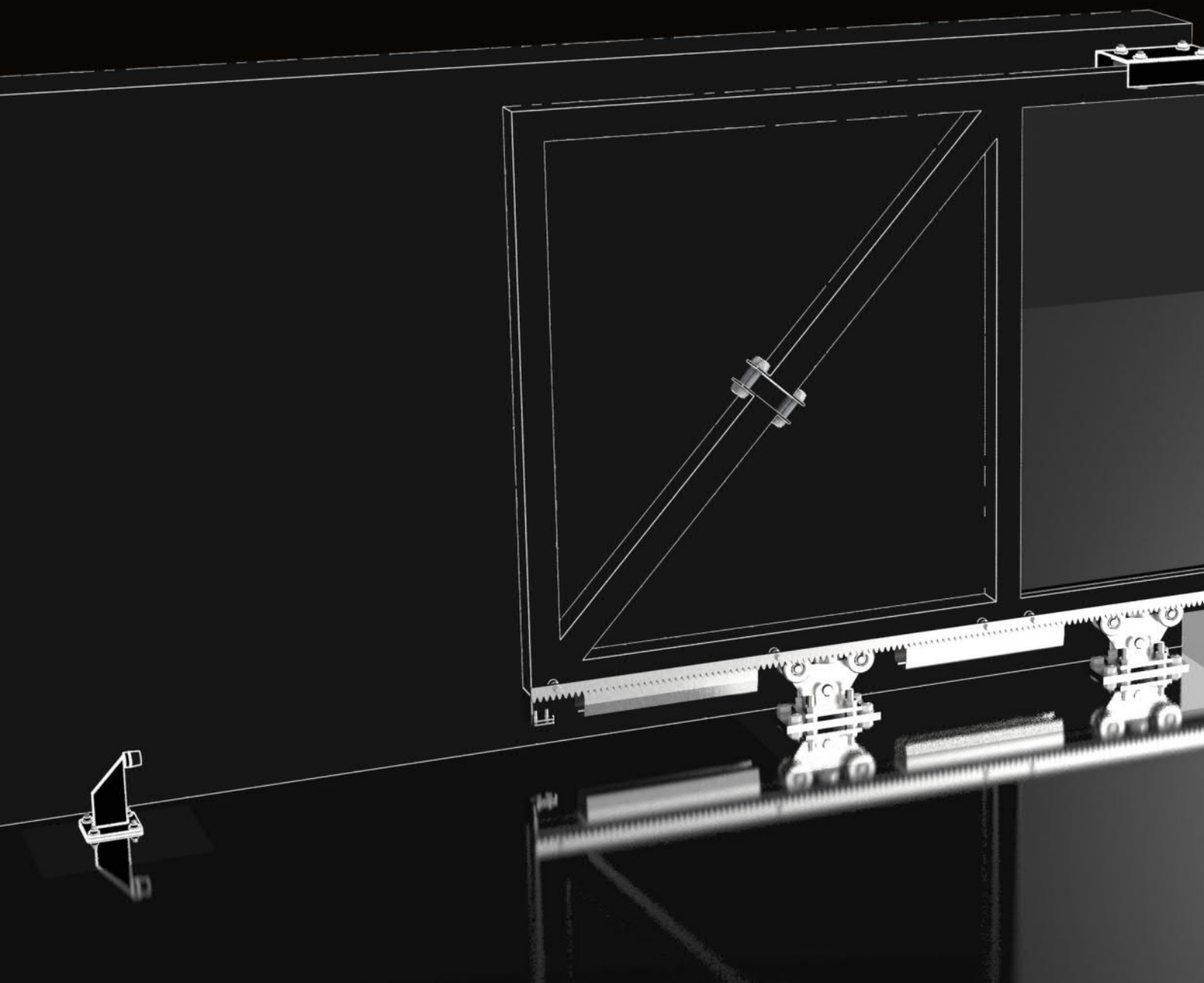

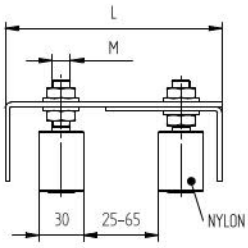

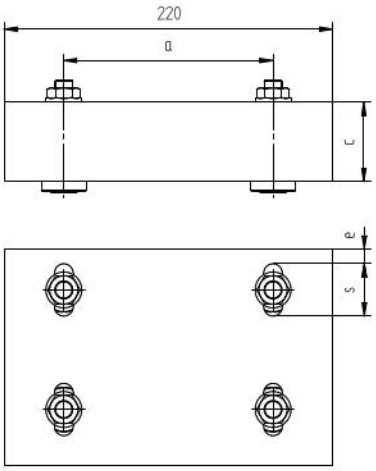

	Quality	Finish	L	a	c	e	s	M
H/12-4T	Fe	Zn	140-180	140	53	10	35	12
H8/12-4T	AISI304	raw	135-175	155	56	16	58	14

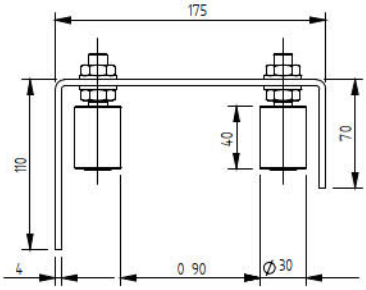

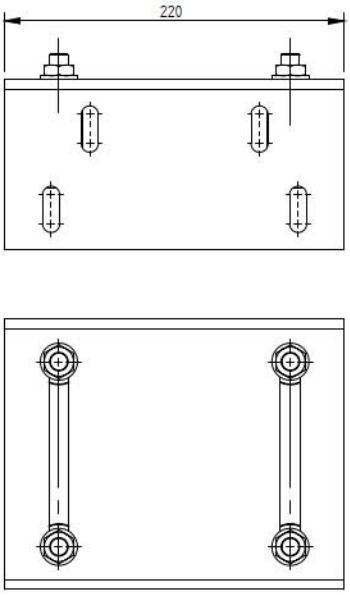

	Quality	Finish
H/12-4	Fe	Zn

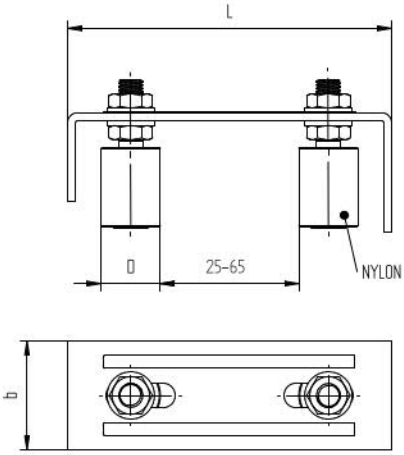

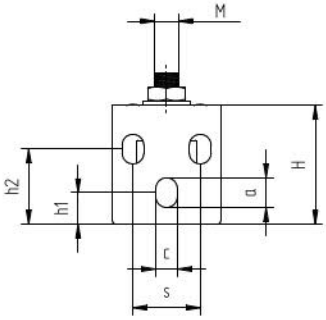

	Quality	Finish	L	a	b	c	D	h1	h2	H	s	M
H/12-2	Fe	Zn	165	-	68	-	41	-	-	64	-	16
H/12-2S			164	15	57	11	30	14	36	60	34	12
H8/12-2S	AISI304	raw										

top

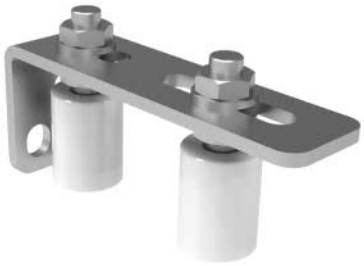

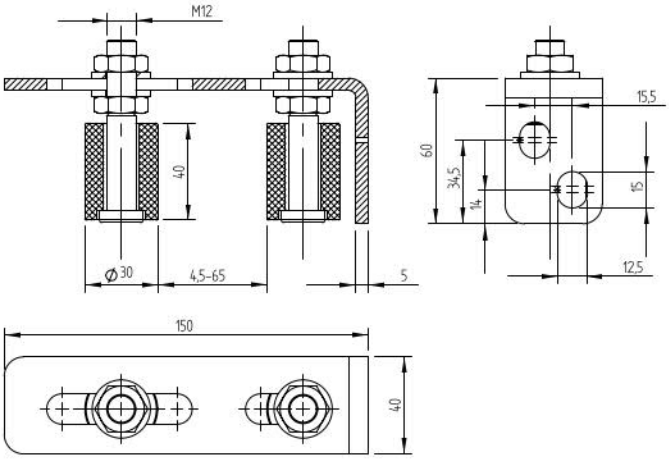

	Quality	Finish
H/53-2	Fe	Zn

new

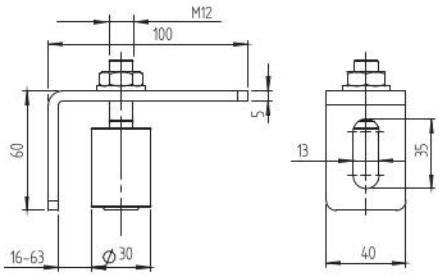

	Quality	Finish	
H/53-30W	Fe	Zn	U/40x40

new

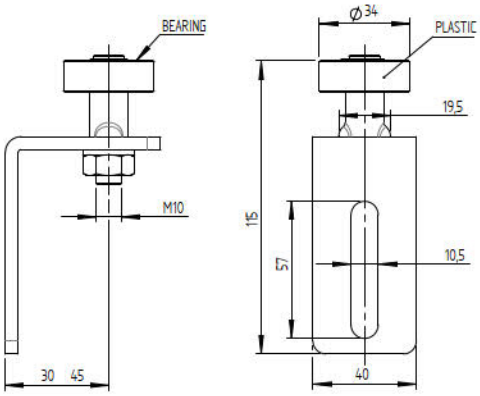

	Quality	Finish	
H/53	Fe	Zn	U/40x40
H8/53	AISI304	raw	

new

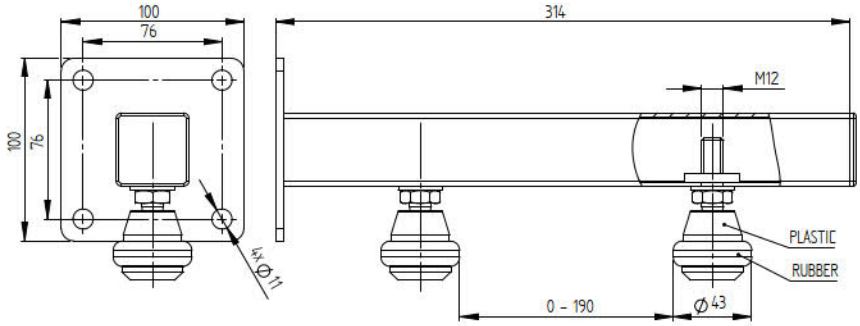

	Quality	Finish
H/52-2	Fe	Zn

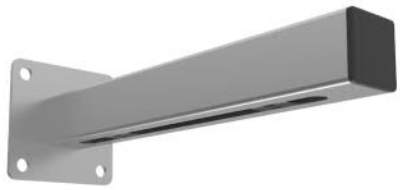

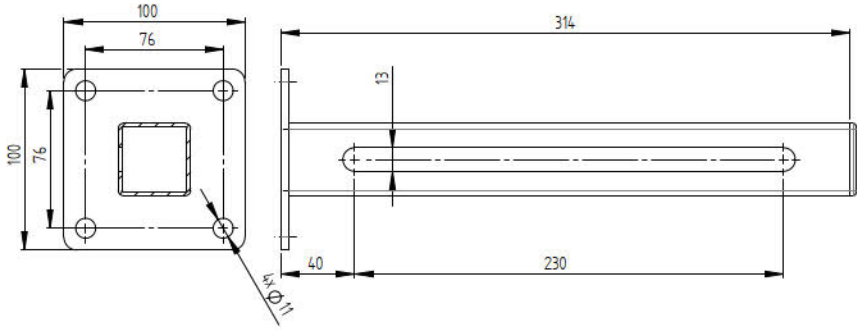

	Quality	Finish		
H/52-40x40	Fe	Zn	H/04-25-W H/04-30-B H/04-30-W	new
H8/52-40x40	AISI304	raw	H/04-32-W H/04G-43 H8/04-22-W H8/04-32-W	new

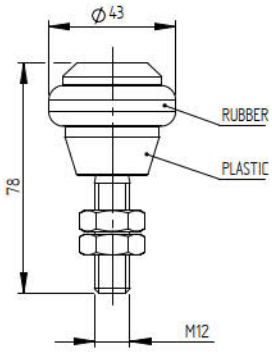

	Quality	Finish			
H/04G-43	Fe	Zn	-	U/50x50	top

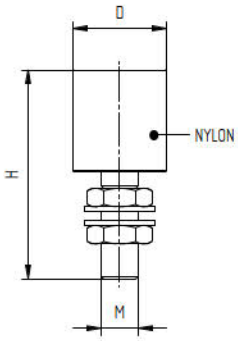

	Quality	Finish	Color		D	H	M		
H8/04-22-W	AISI304	raw	White	-	22	75	12	A/6900-020	new
H/04-25-W	Fe	Zn	White	-	25			-	
H/04-30-W			White	-	30			U/40x40	top
H/04-30-B			Black						top
H/04-32-W			White	-	32				
H8/04-32-W	AISI304	raw	White						
H/04L-40-W	Fe	Zn	White	✓	40	90	16	U/50x50	new
H/04-42-W			White	-	41				
H/04-42-B			Black						

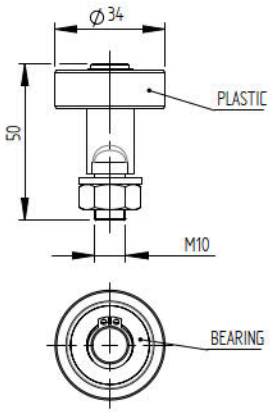

	Quality	Finish			
H/04L-35	Fe	Zn	✓	U/40x40	new

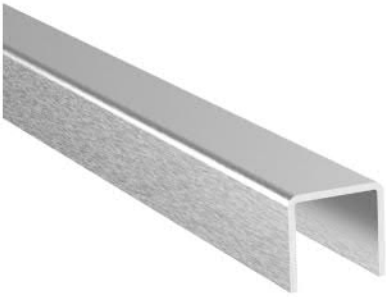

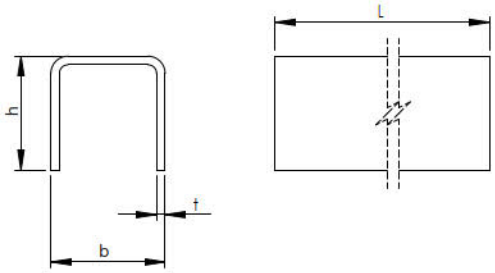

	Quality	Finish	bxh	t	L	
A/6900-020	AISI304	raw	26x28	2	2500	H8/04-22-W
U/40x40x3-3M	Fe		40x40	3	3000	H/04-30… H/04-32-W H8/04-32-W
U/40x40x3-6M					6000	
U/50x50x3-3M			50x50		3000	H/04-42… H/04G-43 H/04L-42
U/50x50x3-6M					6000	

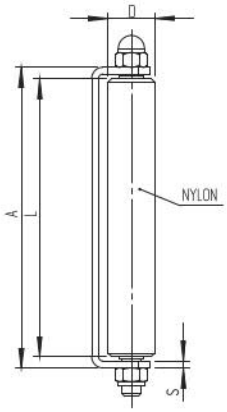

	Quality	Finish	Color	A	D	L	M	s	
H/21-250W	Fe	Zn	White	265	41	250	16	6	new
H/21-305B			Black	320	66	305	1/2"	5	new
H/21-305W			White	320	62,5	305	1/2"	5	new

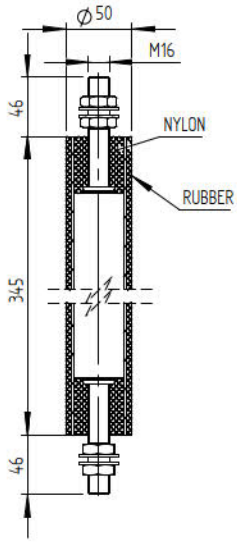

	Quality	Finish
H/29-V	Fe	Zn

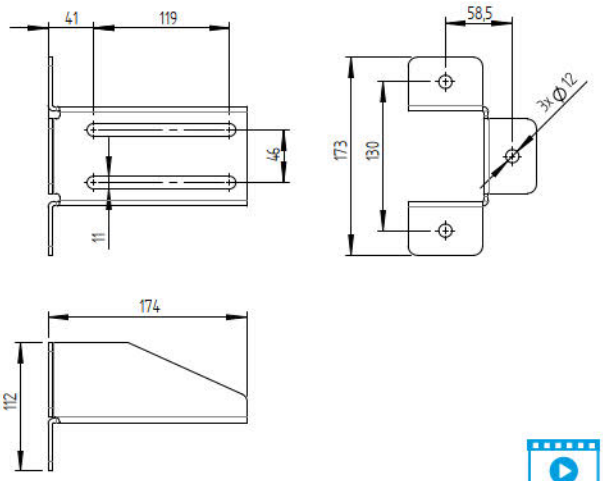

	Quality	Finish	
H/16-46x130	Fe	Zn	
H8/16-46x130	AISI304	raw	new

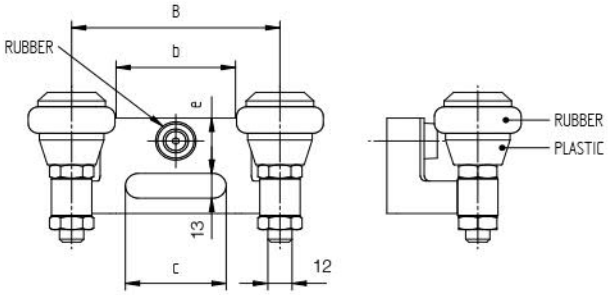

	Quality	Finish	Color	b	c	e	B	
H/37-40P	Fe	Zn	Black	40	50	29	83	top
H8/37-40P	AISI304	raw						
H/37-60P	Fe	Zn		60	50	29	103	new
H8/37-60P	AISI304	raw						
H/37-80P	Fe	Zn		80	60	30	123	

H/16-46x130
H8/16-46x130

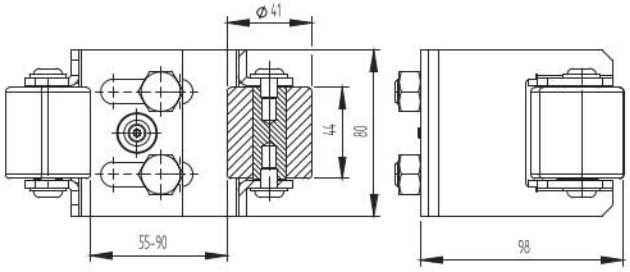

	Quality	Finish	
H/37-55-90	Fe	Zn	new

H/16-46x130
H8/16-46x130

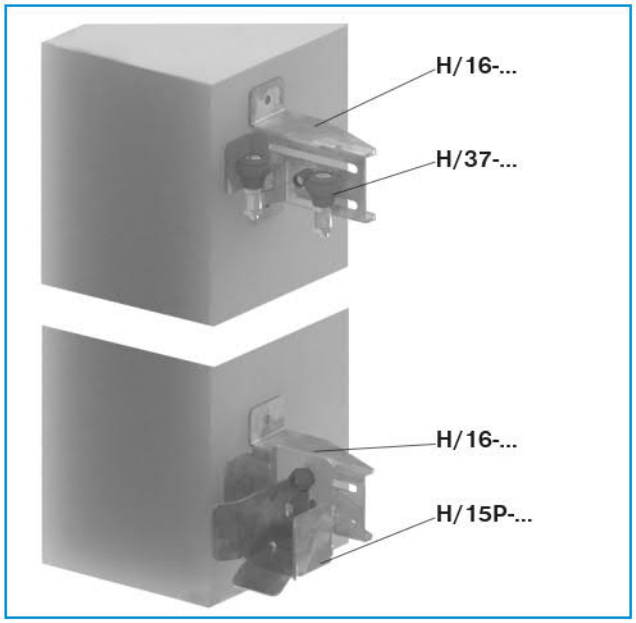

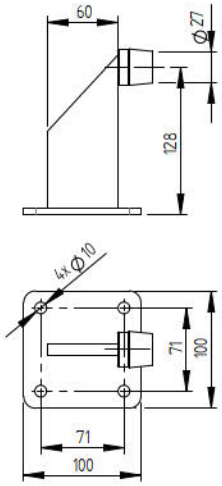

	Quality	Finish
H/10B-60x130	Fe	Zn
H8/10B-60x130	AISI304	raw

new

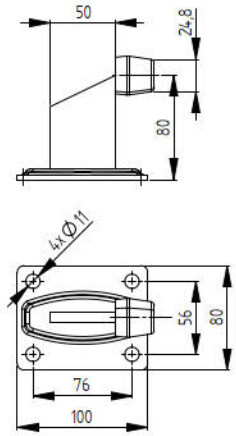

	Quality	Finish
H/10B-50x80	Fe	Zn

new

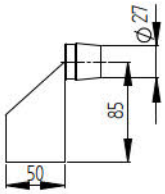

	Quality	Finish
H/10BP-50x100	Fe	Zn

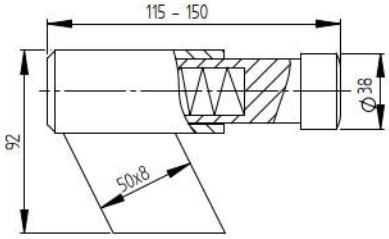

	Quality	Finish
H/10BP-150x92-SPRING	Fe	Zn

new

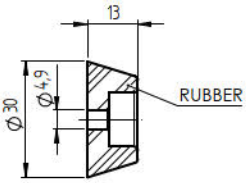

	Quality	Finish
B1/16G	**RUBBER**	**Black**

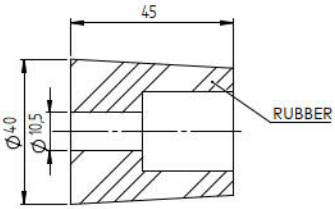

	Quality	Finish
B1/16G-B	**RUBBER**	**Black**

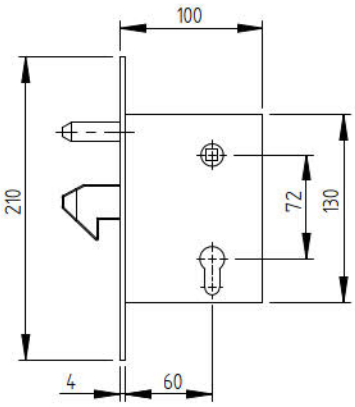

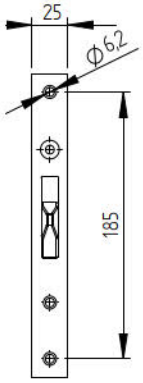

	Quality	Finish	
H/35-64A	Fe	Zn	H/35-K

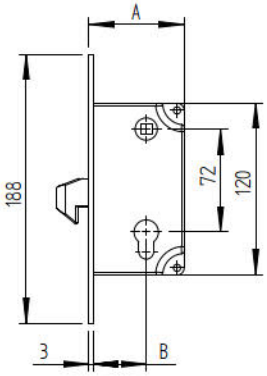

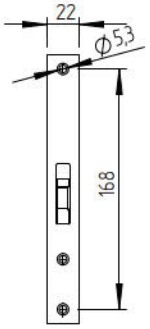

	Quality	Finish	A	B	
H/36-30A	Fe	Zn	56	27	H/36-30K
H/36-40A			66,5	37	H/36-40K

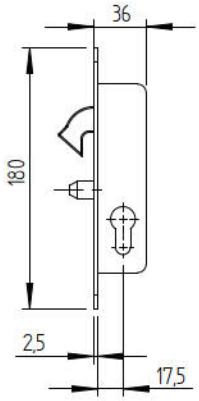

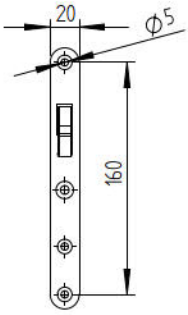

	Quality	Finish	
H/36-20A	Fe	Zn	H/36-20K H8/36-20K

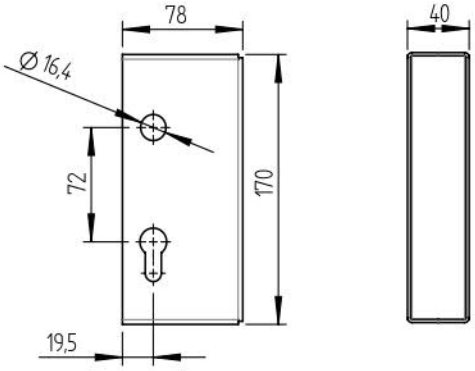

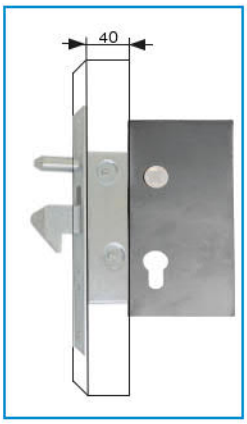

	Quality	Finish
H/35-K	Fe	Zn

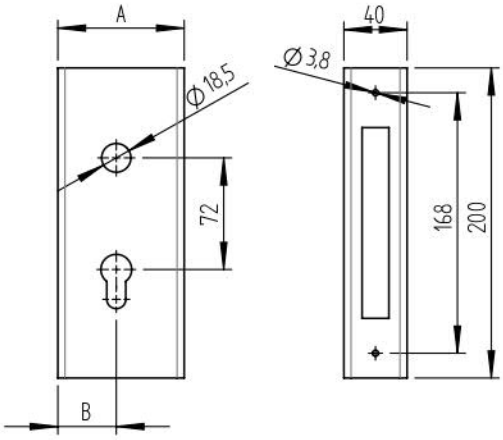

	Quality	Finish	A	B	
H/36-30K	Fe	raw	60	27	new
H/36-40K			80	37	new

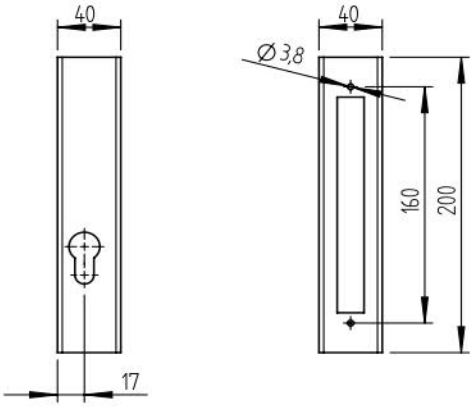

	Quality	Finish	
H/36-20K	Fe	raw	new
H8/36-20K	AISI304	satin	new

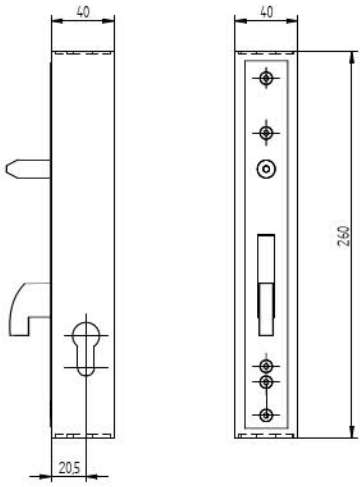

	Quality	Finish
H/46-40x40	Fe	raw

new

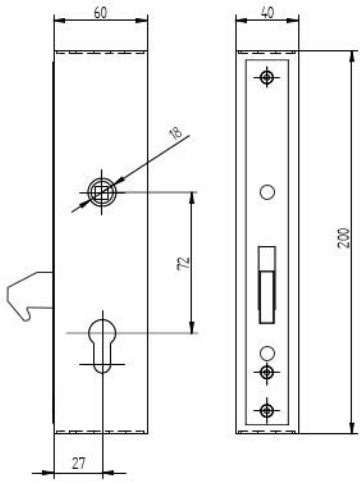

	Quality	Finish
H/46-60x40	Fe	raw

new

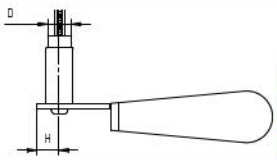

D	-	-	-	D17	D17	D19	-	19	D19,5
Hmax	26	15	18	15	17	17	15	30	35
Model	K01	K02	K03	K11	K12	K13	K21	K22	K23
H/35K		✓					✓		
H/36-30K		✓	✓	✓	✓		✓		
H/36-40K	✓	✓	✓	✓	✓		✓		
H/36-20K		✓					✓		
H8/36-20K		✓					✓		
H/46-40x40							✓		
H/46-60x40		✓	✓	✓	✓		✓		

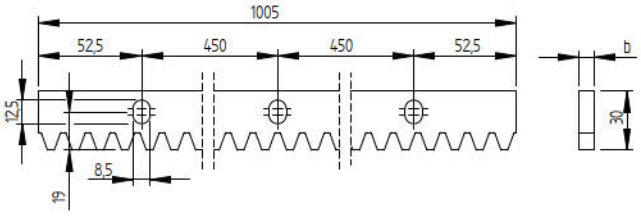

	Quality	Finish	Module	h x b	Gmax (kg)	
H/01Fe-30x8H	Fe	Zn	4	30x8	1200	3x
H8/01-30x8H	AISI304	raw				
H/01Fe-30x10H	Fe	Zn		30x10	1500	
H/01Fe-30x12H				30x12	1700	

top

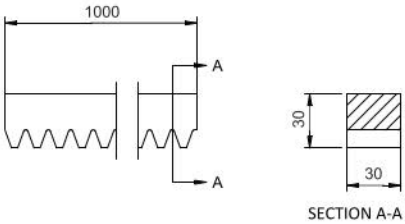

	Quality	Finish	Module	Gmax (kg)
H/01Fe-30x30H	Fe	Zn	6	5000

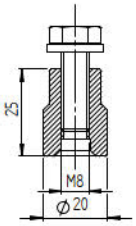

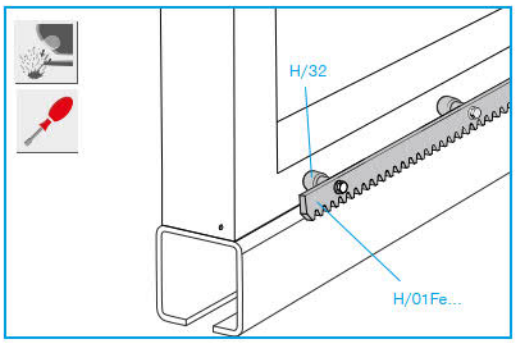

	Quality	Finish
H/32	Fe	Zn
H8/32	AISI304	Raw

new

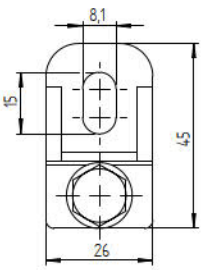

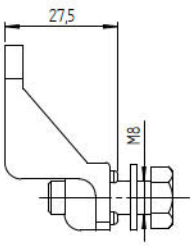

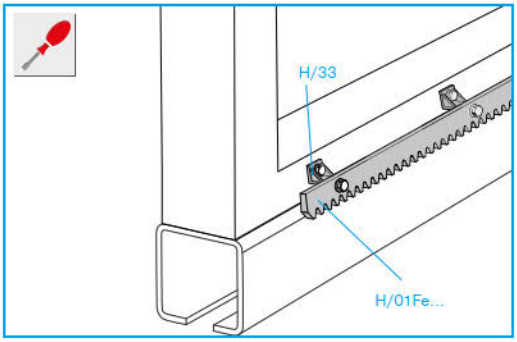

	Quality	Finish
H/33	Fe	Zn

new

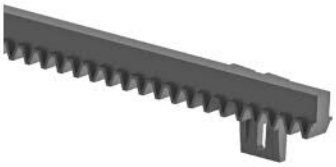

H/01PVC-J-BS

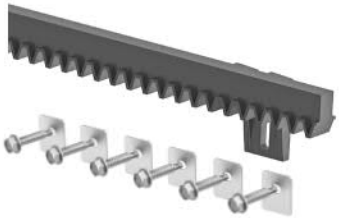

H/01PVC-J

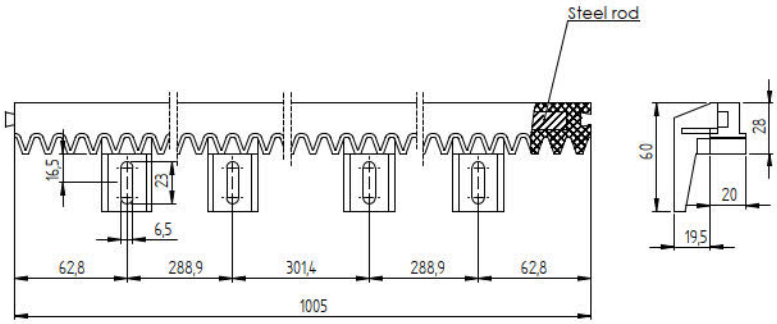

	Quality	Finish	Module	Gmax (kg)	H/01PVC-FS
H/01PVC-J	PVC	raw	4	300	1x
H/01PVC-J-BS					-

top

H/01PVC-BS

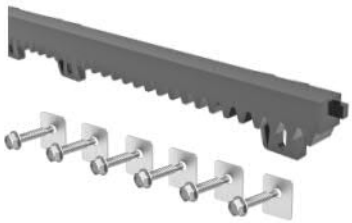

H/01PVC

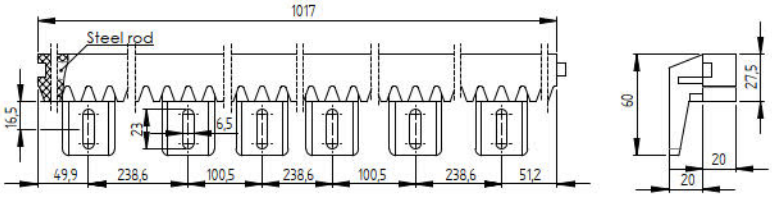

	Quality	Finish	Module	Gmax (kg)	H/01PVC-FS
H/01PVC	PVC	raw	4	700	1x
H/01PVC-BS					-

H/01PVC-S-BS

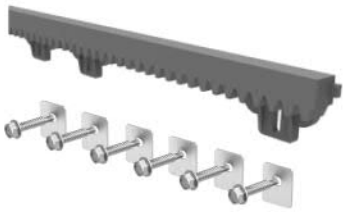

H/01PVC-S

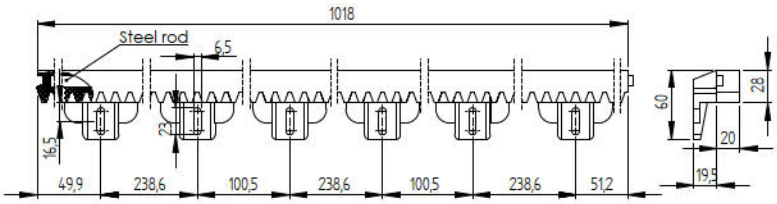

	Quality	Finish	Module	Gmax (kg)	H/01PVC-FS
H/01PVC-S	PVC	raw	4	1200	1x
H/01PVC-S-BS					-

H/01PVC-UP-BS

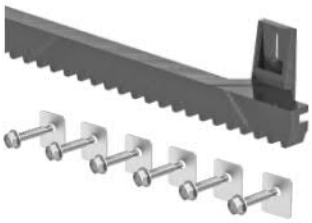

H/01PVC-UP

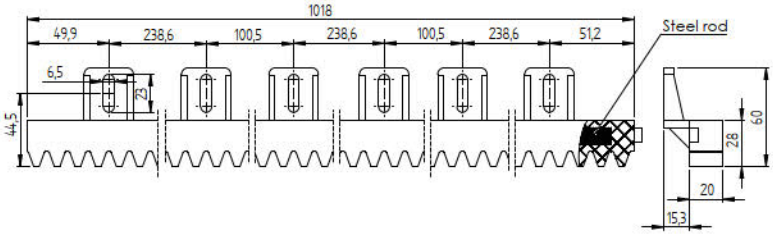

	Quality	Finish	Module	Gmax (kg)	H/01PVC-FS
H/01PVC-UP	PVC	raw	4	700	1x
H/01PVC-UP-BS					-

	Quality	Finish
H/01PVC-FS	Fe	Zn

new

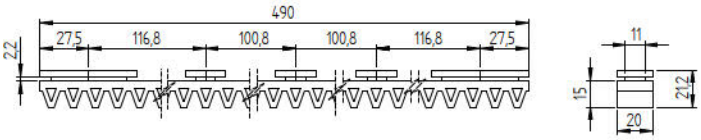

H/01PVC-AL-K

	Quality	Finish	Gmax (kg)
H/01PVC-AL	NYLON	raw	300

new

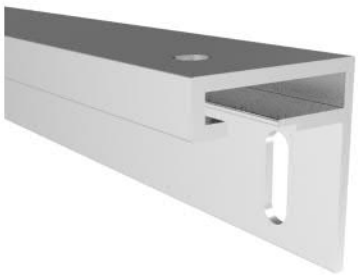

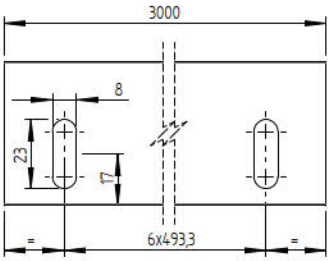

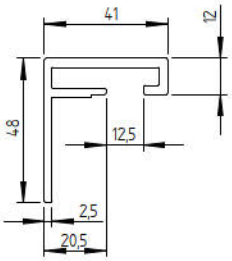

	Quality	Finish
H/01PVC-AL-K	ALUMINIUM	natural

new

3 KOLIESKOVÉ BRÁNY
ROLLING GATES

KOLIESKA
WHEELS

SPODNÉ VODIACE PROFILY
TRACKS

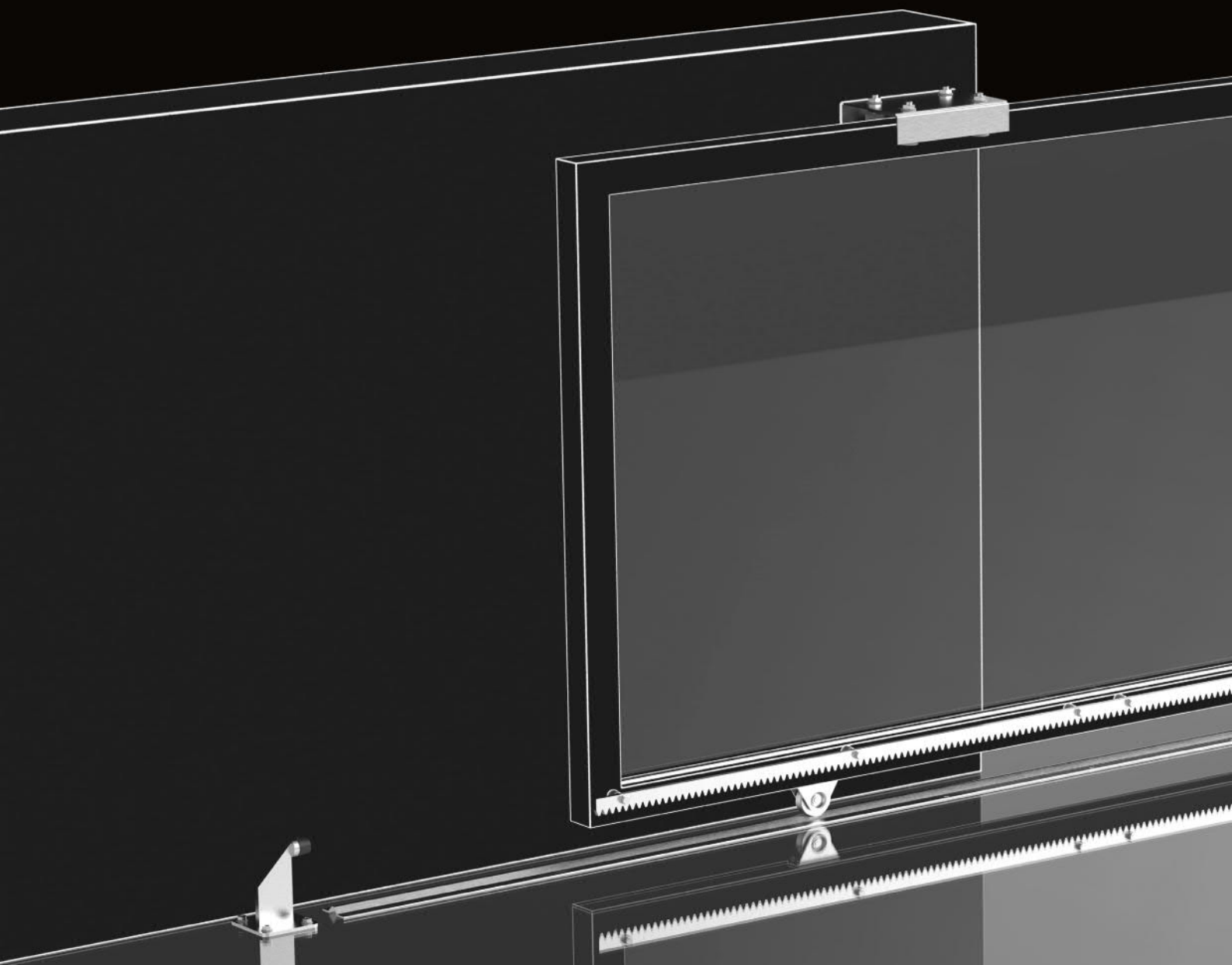

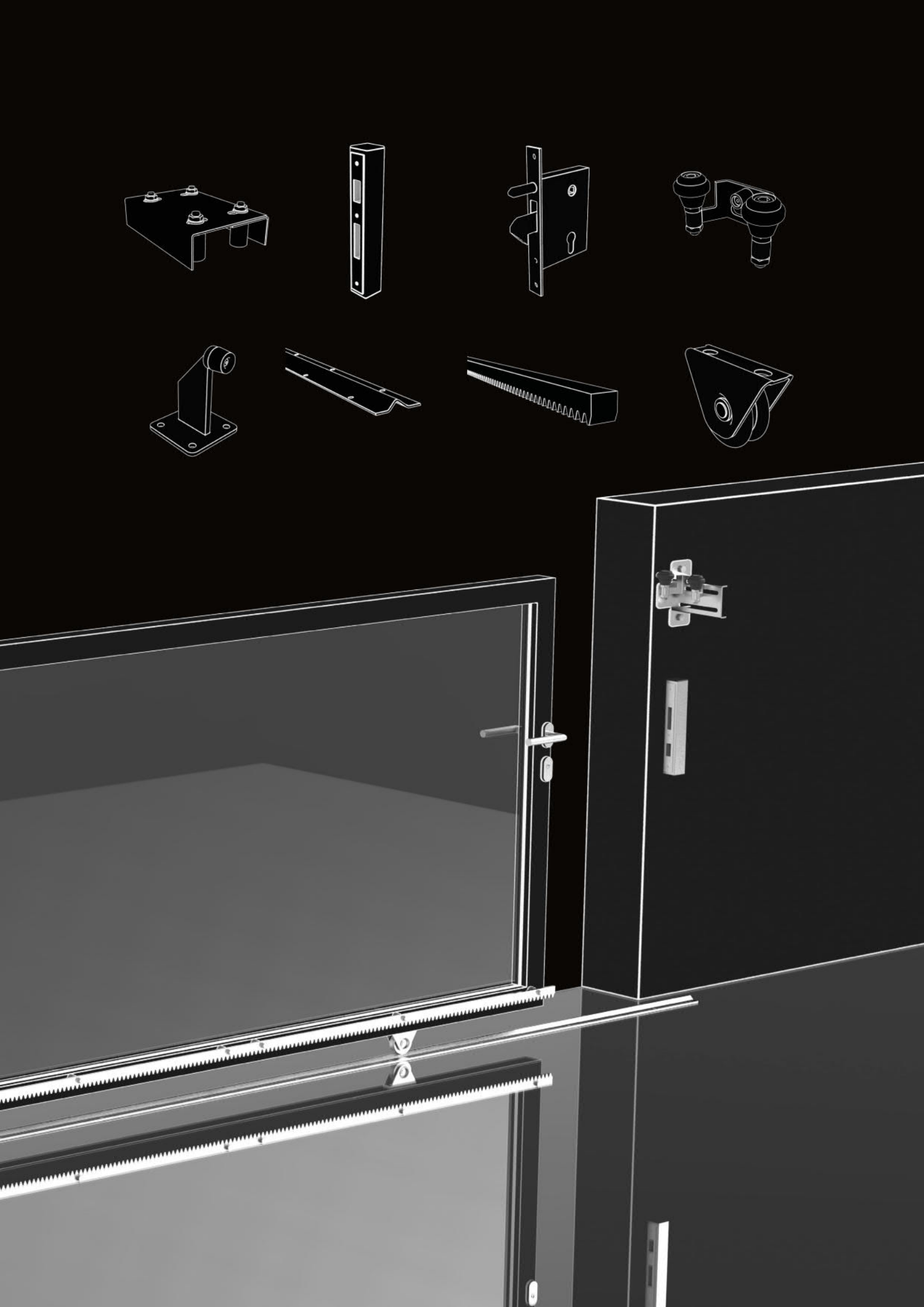

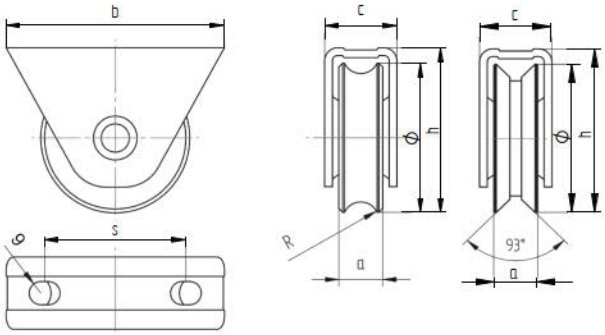

	Quality	Finish	Ø	H	h	R	a	b	c	s	Gmax (kg) (2xH/31...)			
H/31U-60	Fe	Zn	58	75	64	8	17	85	28	55	200			
H/31U-80C			78	95	85		20	100	34	70	300	✓	-	-
H8/31U-80-R10	AISI304	raw				10	23							
H/31U-100	Fe	Zn	98	120	105	8	22		36	105	400			
H/31V-60			58	74	64	-	17	85	28	55	200			
H/31V-80C			78	95	85		20	100	34	70	300	-	✓	-
H8/31V-80	AISI304	raw												
H/31V-100	Fe	Zn	98	118	106		22	130	35	105	350			

top
top

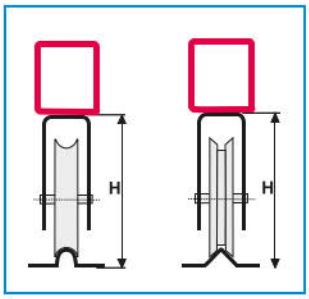

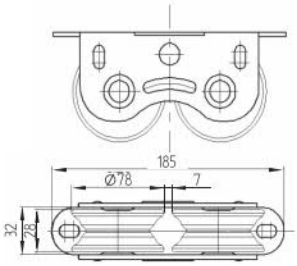

	Quality	Finish	Gmax (kg) (2xH/31...)			
H/31V-2-80 HEAVY	Fe	Zn	600	-	✓	-

new

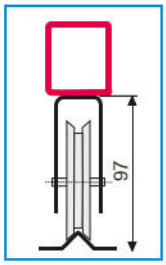

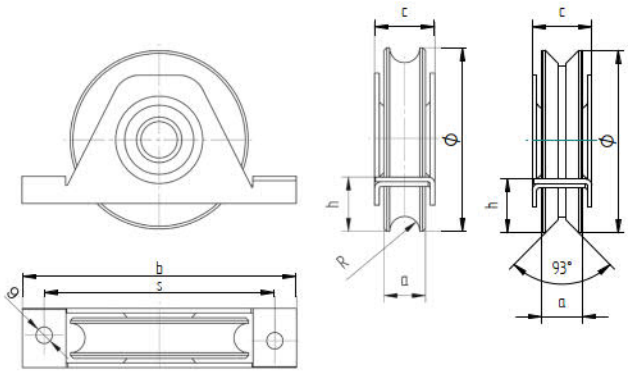

	Quality	Finish	Ø	H	h	R	a	b	c	s	Gmax (kg) (2xH/38...)			
H/38U-80C	Fe	Zn	78	35	27	8	20	135	32	110	250	✓	-	-
H8/38U-80-R10	AISI304	raw				10	23							
H/38U-100	Fe	Zn	98	45	29	8	22	150		127	300			
H/38V-80C			78	37	28	-	20	135	34	112	250	-	✓	-
H8/38V-80	AISI304	raw												
H/38V-100	Fe	Zn	98	44	34		22	150	32	127	300			

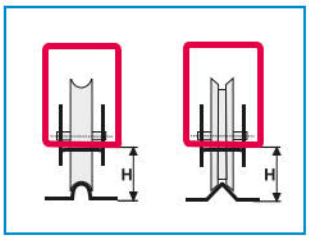

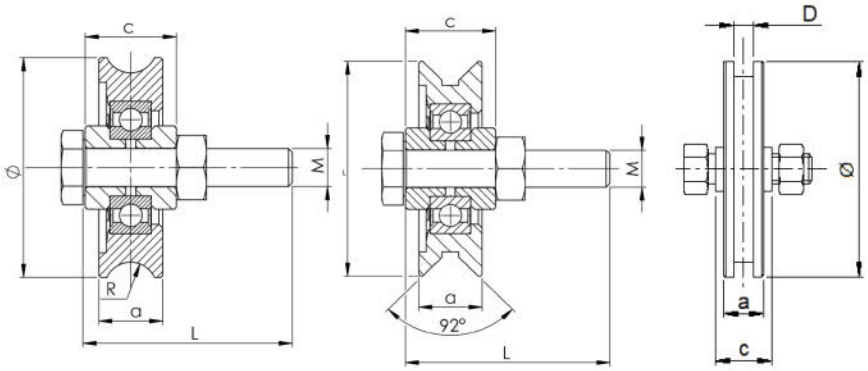

	Quality	Finish	Ø	R	D	a	c	L	M	Gmax (kg) (2xH/06...)				
H/06U-60	Fe	Zn	58	8		17	24	55	10	200				
H/06U-80				8		22	33	70	14					
H8/06U-80-R8	AISI304	raw	78	8	-	20	28	55	10	300	✓	-	-	new
H8/06U-80-R10				10		25	33	60	14					
H/06U-100	Fe	Zn	98	8		22	30		12	400				
H/06V-60			58			17	24			200				
H/06V-80			78			20	27	55	10	300				
H8/06V-80	AISI304	raw			-							✓	-	
H/06V-100	Fe	Zn	98	-		22	30	60	12	400	-			
H/06V-100-2			100			25		70	14	700				
H/06H-50C			50		5	15	27	40	8	120		-	✓	new
H/06H-80C			78		7	20	28	55	10	300				new

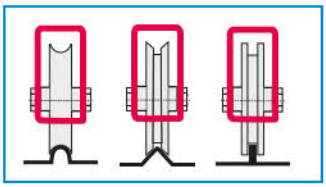

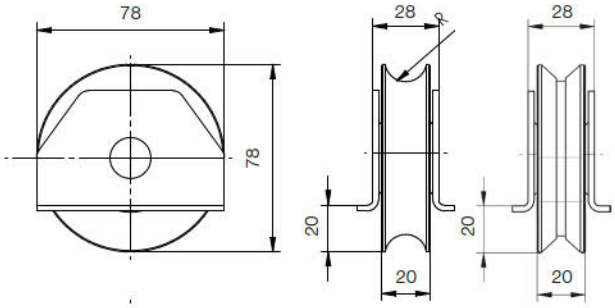

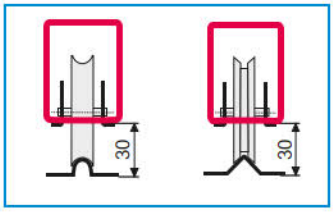

	Quality	Finish	R	Gmax (kg) (2xH/49...)			
H/49U-80	Fe	Zn	8	250	✓	-	-
H/49V-80			-	250	-	✓	-

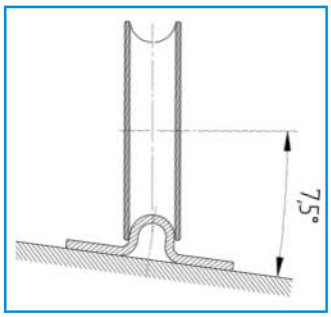

H/39V-...
H8/39V-...

H/39U-...
H8/39U-...

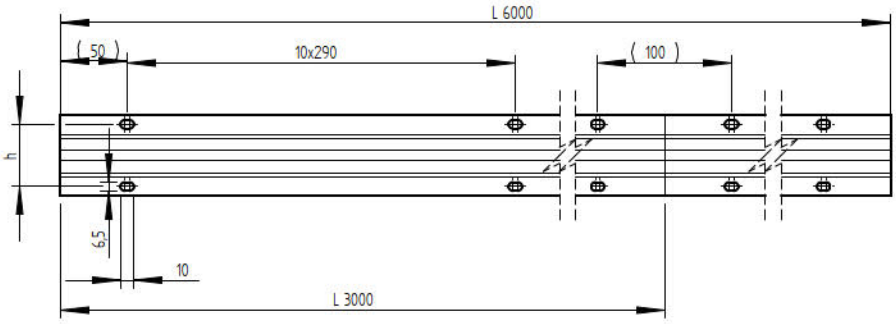

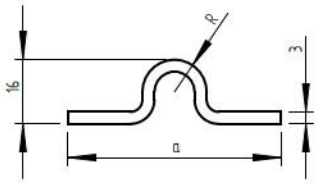

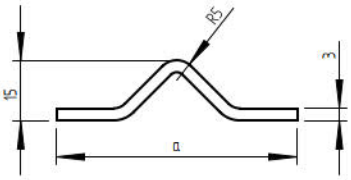

	Quality	Finish	a	h	R	L		
H/39U-3000	Fe	Zn	60	46,5	8	3000	✓	-
H/39U-6000						6000		
H8/39U-3000	AISI304	raw	55	40	10	3000		
H8/39U-6000						6000		
H/39V-3000	Fe	Zn	60	46,5	5	3000	-	✓
H/39V-6000						6000		
H8/39V-3000	AISI304	raw				3000		
H8/39V-6000						6000		

top

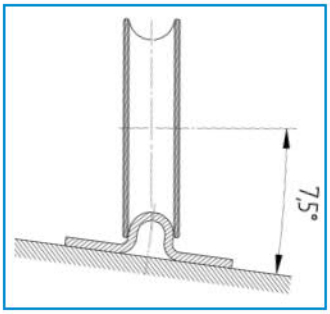

	I (V)	P (W)
H/50	230V	18

Vyhrievací kábel/Heating cable

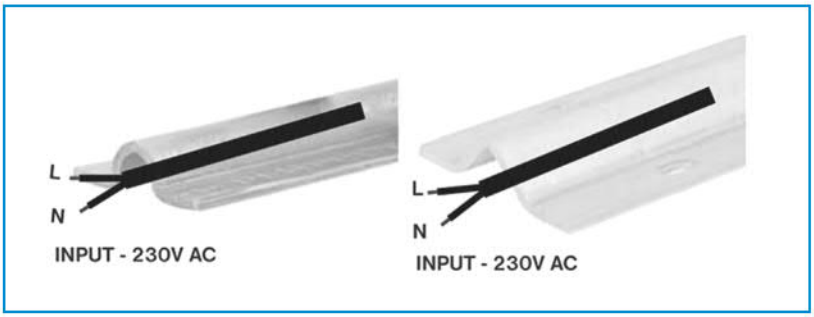

4 ZÁVESNÉ BRÁNY
HANGING GATES

PROFILY, VOZÍKY
TRACKS, CARRIAGES

PRÍSLUŠENSTVO
ACCESSORIES

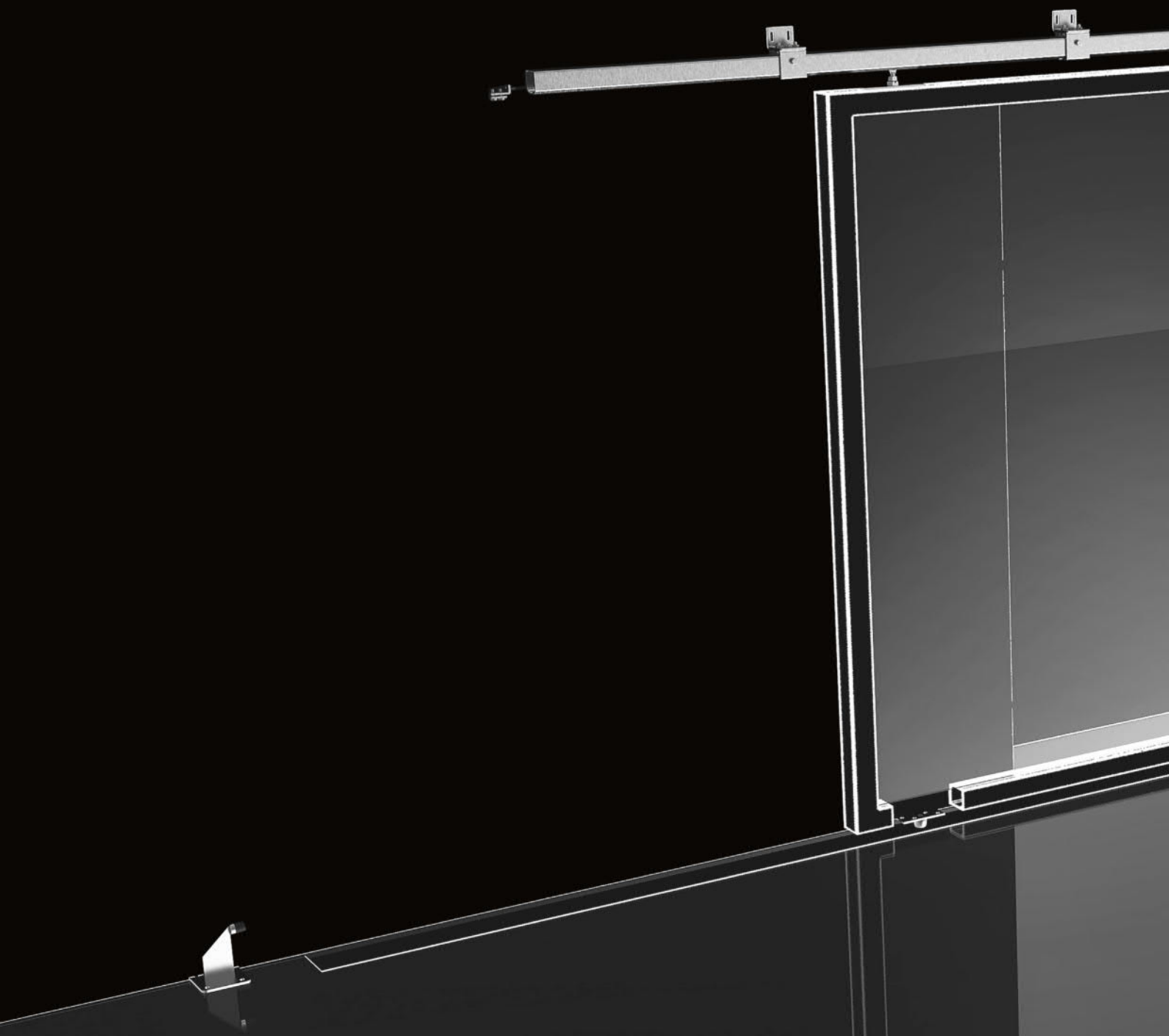

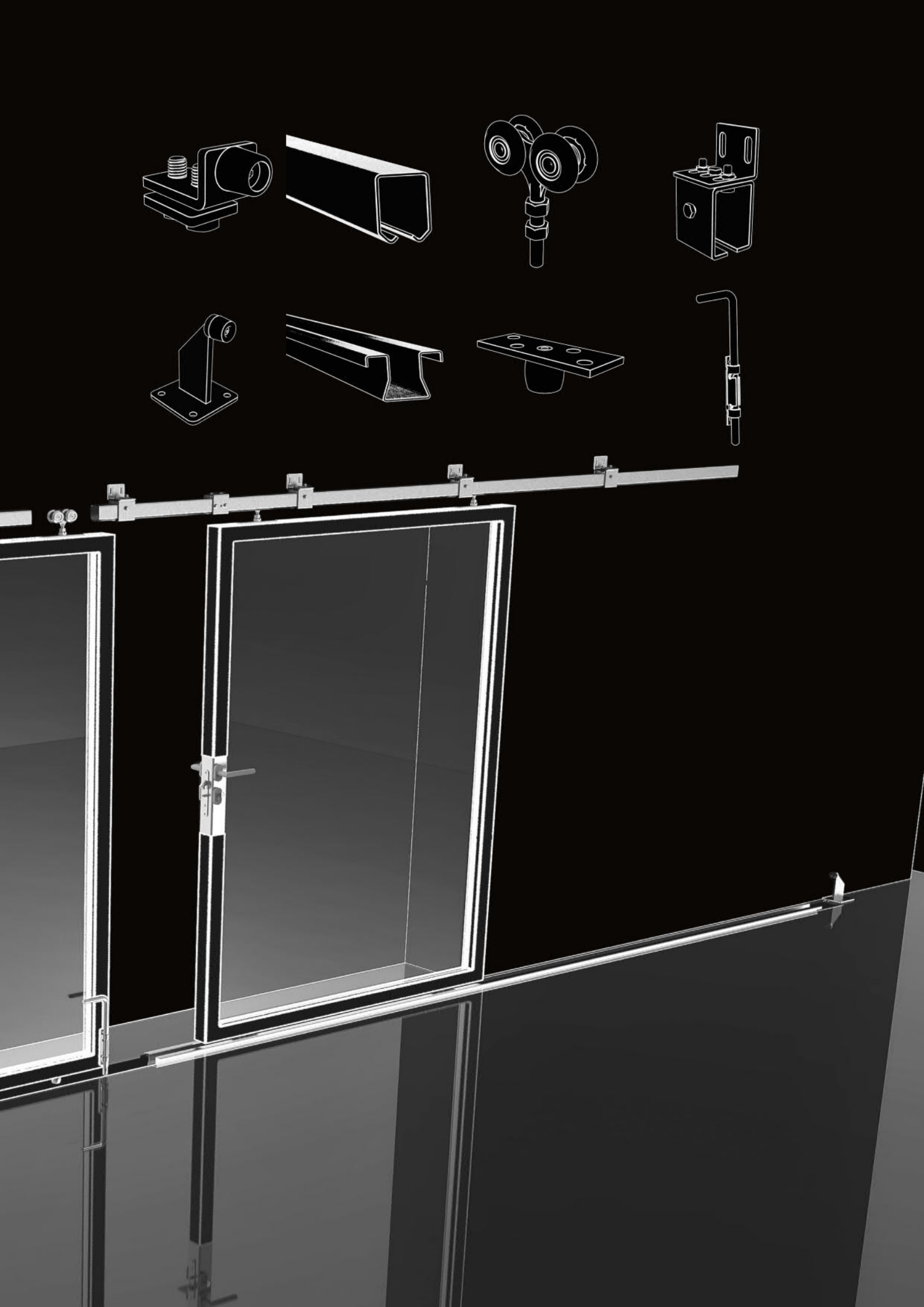

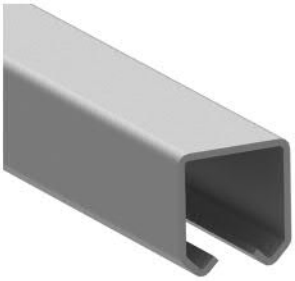

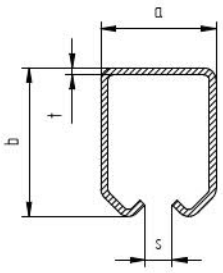

	Quality	Finish	a	b	t	s	L
H/18-33x34-Fe-3000	Fe	raw	33	34	2	10	3000
H/18-33x34-Fe-6000							6000
H/18-33x34-Zn-3000		Zn					3000
H/18-33x34-Zn-6000							6000
H/18-42x54-Fe-3000		raw	42	54	2,5	12	3000
H/18-42x54-Fe-6000							6000
H/18-42x54-Zn-3000		Zn					3000
H/18-42x54-Zn-6000							6000
H8/18-42x54-3000	AISI304	raw					3000
H8/18-42x54-6000							6000
H/18-57x67-Zn-3000	Fe	Zn	57	67	3	16	3000
H/18-57x67-Zn-6000							6000

top

H/18... H8/18...	H/47B... H8/47B...	H/47V... H8/47V...
L3000	5x	
L6000	9x	

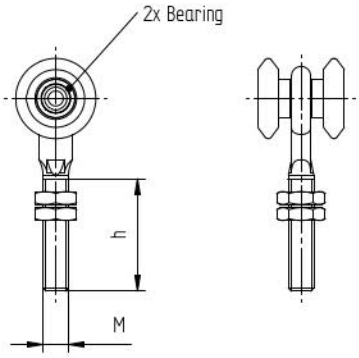

	Quality	Finish	M	h	Gmax (2xH/07...)	▢
H/07-33x34	Fe	Zn	8	35	60	33x34
H/07-42x54			12	72	200	42x54
H/07-57x67			20	85	400	57x67

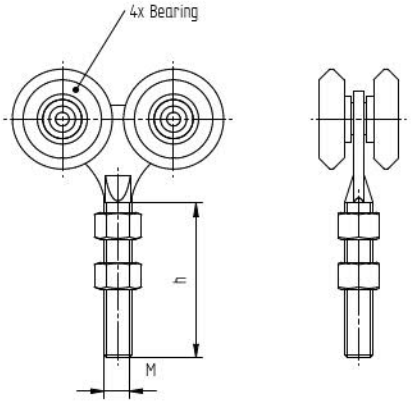

	Quality	Finish	M	h	Gmax (2xH/08...)	▢
H/08-33x34	Fe	Zn	8	40	90	33x34
H/08-33x34-NYLON				30	60	
H/08-42x54			12	68	400	42x54
H/08-42x54-NYLON					200	
H8/08-42x54	AISI304	raw		58	500	
H/08-57x67	Fe	Zn	20	85	700	57x67
H/08-57x67-NYLON					350	

top

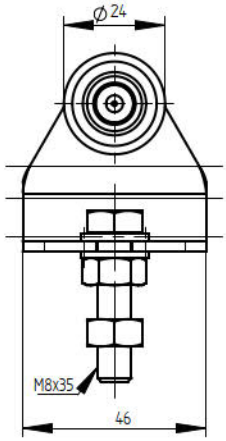

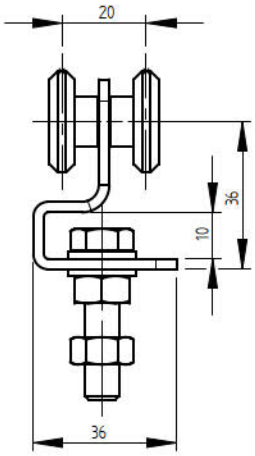

	Quality	Finish	Gmax (2xH/26...)	⊓
H/26-33x34	Fe	Zn	60	33x34

new

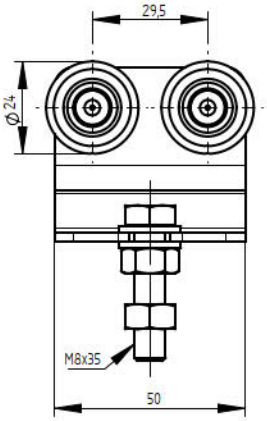

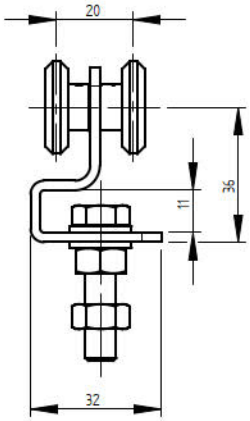

	Quality	Finish	Gmax (2xH/27...)	⊓
H/27-33x34	Fe	Zn	80	33x34
H/27-33x34-NYLON			40	

new

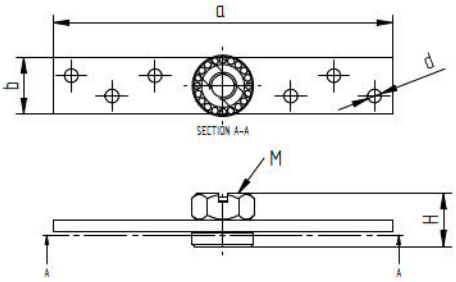

	Quality	Finish	M	a	b	d	H	⊓
H/48-M8	Fe	Zn	8	100	20	4x6	20	33x34
H/48-M12			12	150	25	6x6	24	42x54
H/48-M20			20	150	40	4x10	32	57x67

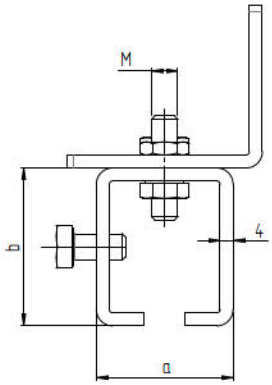

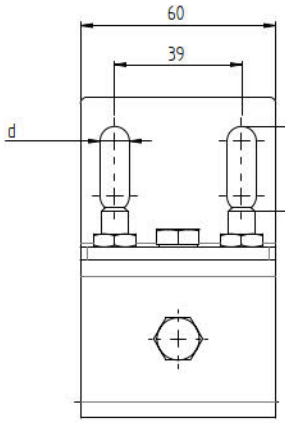

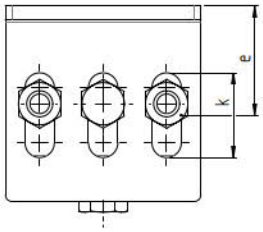

	Quality	Finish	a	b	d	k	e	M	▢	▢
H/47B-33x34	Fe	Zn	42,5	48,5	9	26	35	8	33x34	5x/L3000 9x/L6000
H/47B-42x54			53	72	11	30	37	10	42x54	
H8/47B-42x54	AISI304	raw								
H/47B-57x67	Fe	Zn	66	86			42		57x67	

top new

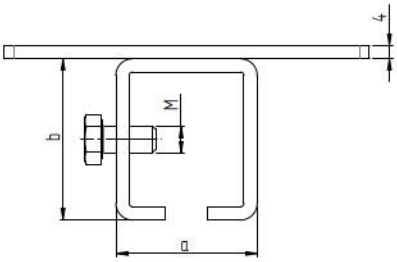

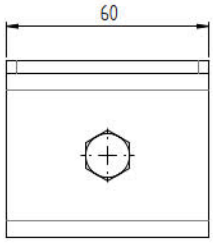

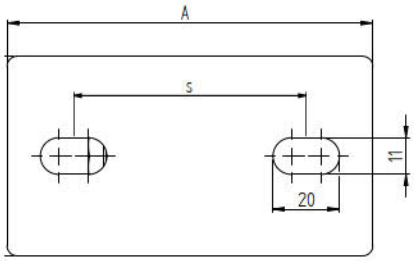

	Quality	Finish	A	a	b	s	M	▢	▢
H/47V-33x34	Fe	Zn	110	42,5	48,5	70	8	33x34	5x/L3000 9x/L6000
H/47V-42x54			120	53	72	80	10	42x54	
H8/47V-42x54	AISI304	raw							
H/47V-57x67	Fe	Zn	130	66	86	94		57x67	

new

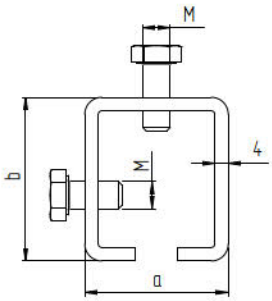

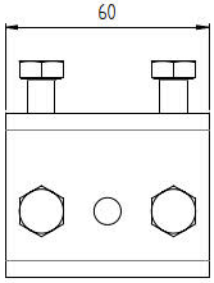

	Quality	Finish	a	b	M	▢
H/23-33x34	Fe	Zn	42,5	48,5	8	33x34
H/23-42x54			52,5	72	10	42x54
H/23-57x67			66	86		57x67

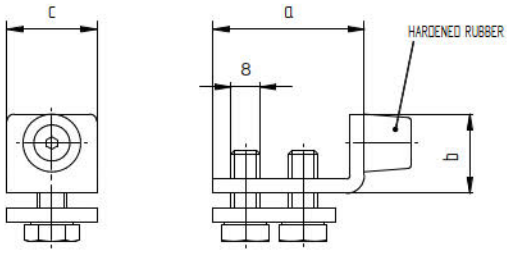

	Quality	Finish	a	b	c	▢
H/22	**Fe**	**Zn**	42	22	25	33x34 42x54
H/22-57x67			59	40	40	57x67

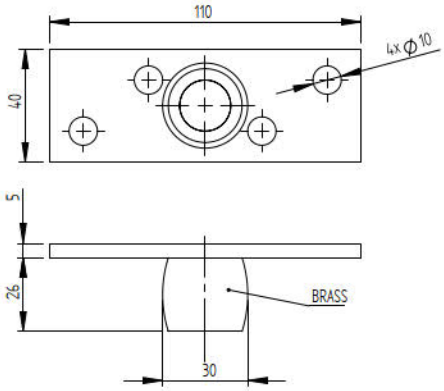

	Quality	Finish
H/60	**Fe + brass**	**Zn**

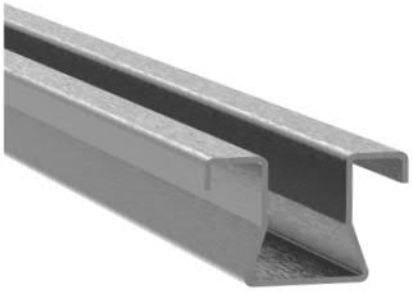

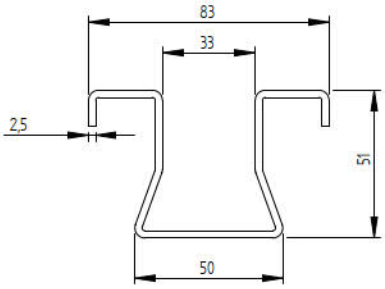

	Quality	Finish	L
H/59-Zn-3000	**Fe**	**Zn**	3000
H/59-Zn-6000			6000

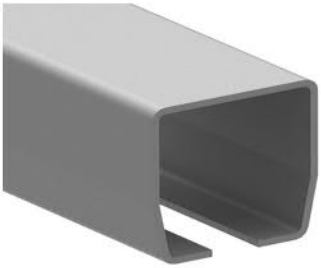

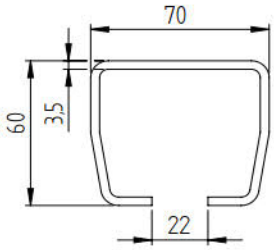

	Quality	Finish	L
H/02-70x60-Fe-3000	Fe	raw	3000
H/02-70x60-Fe-6000			6000
H/02-70x60-Zn-3000		Zn	3000
H/02-70x60-Zn-6000			6000

H/08-70x60B

H/08-70x60S

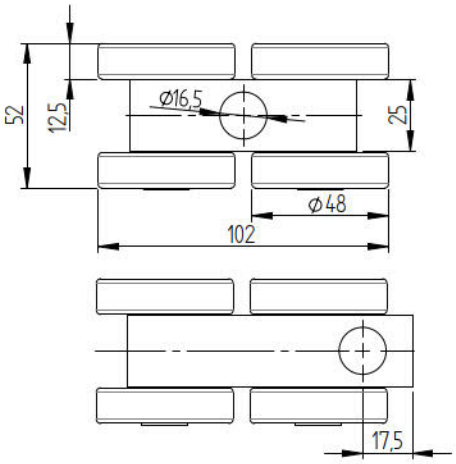

	Quality	Finish	Gmax	❑	
H/08-70x60B	Fe	Zn	400	70x60	new
H/08-70x60S					new

H/48-M16

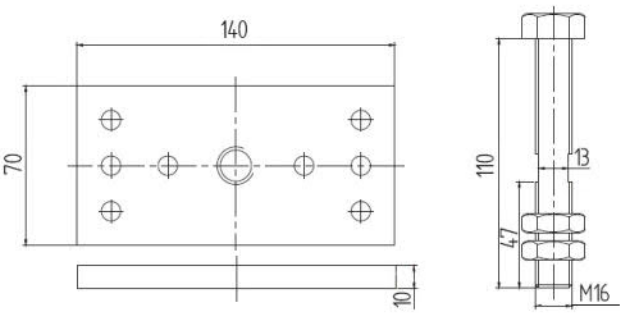

	Quality	Finish	
H/48-M16	Fe	Zn	new

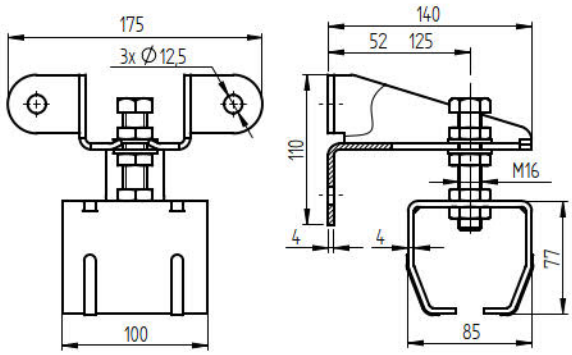

	Quality	Finish
H/47B-70x60	Fe	Zn

new

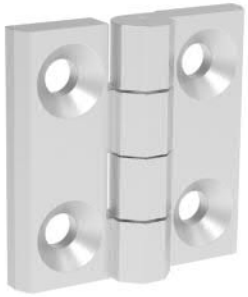

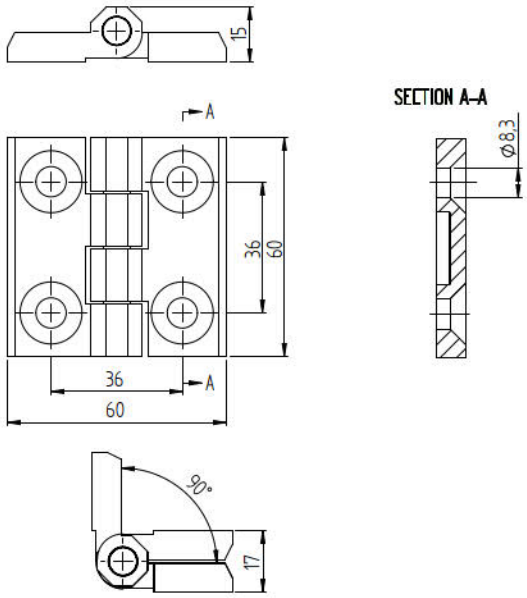

	Quality	Finish	Ø	Gmax (kg) 2xD16/73-70-000
D16/77-60	AISI316	raw	Flat	50

new

5 KRÍDLOVÉ BRÁNY
SWING GATES

ZÁVESY FLEX
FLEX HINGES

ZÁVESY FLEX - ATYP
FLEX HINGES - ATYPICAL

ZÁVESY FIX
FIX HINGES

ZÁMKOVÉ SETY, KRABICE
LOCK SETS, BOXES

ZÁMKOVE DORAZY
SHRIKING BOXES

ZÁMKY
LOCKS

KOMPATIBILITA
COMPATIBILITY

KĽUČKY
HANDLES

ŠTÍTKY
LOCK COVER PLATES

DORAZY A ZÁSTRČE
BATTENS & LATCHES

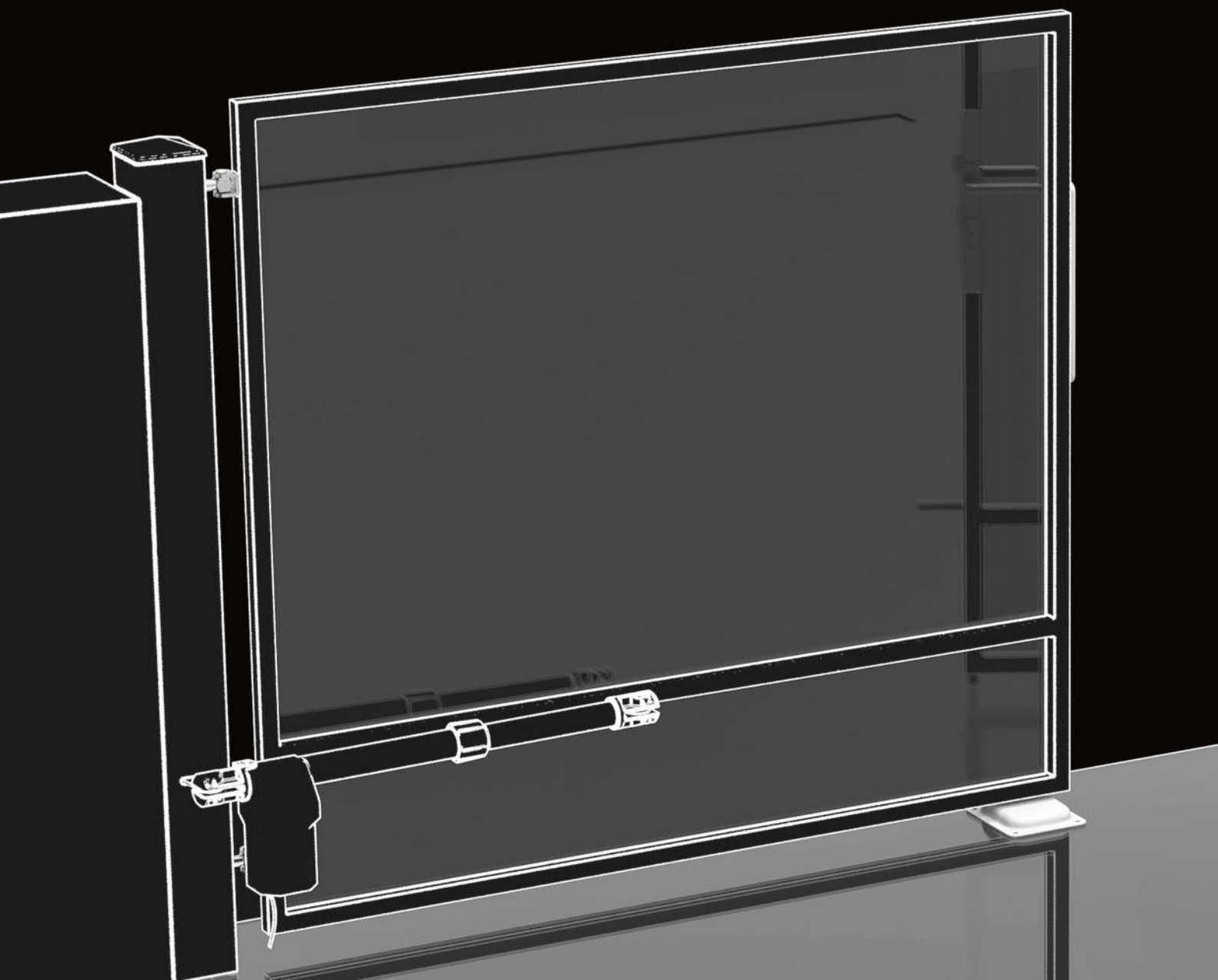

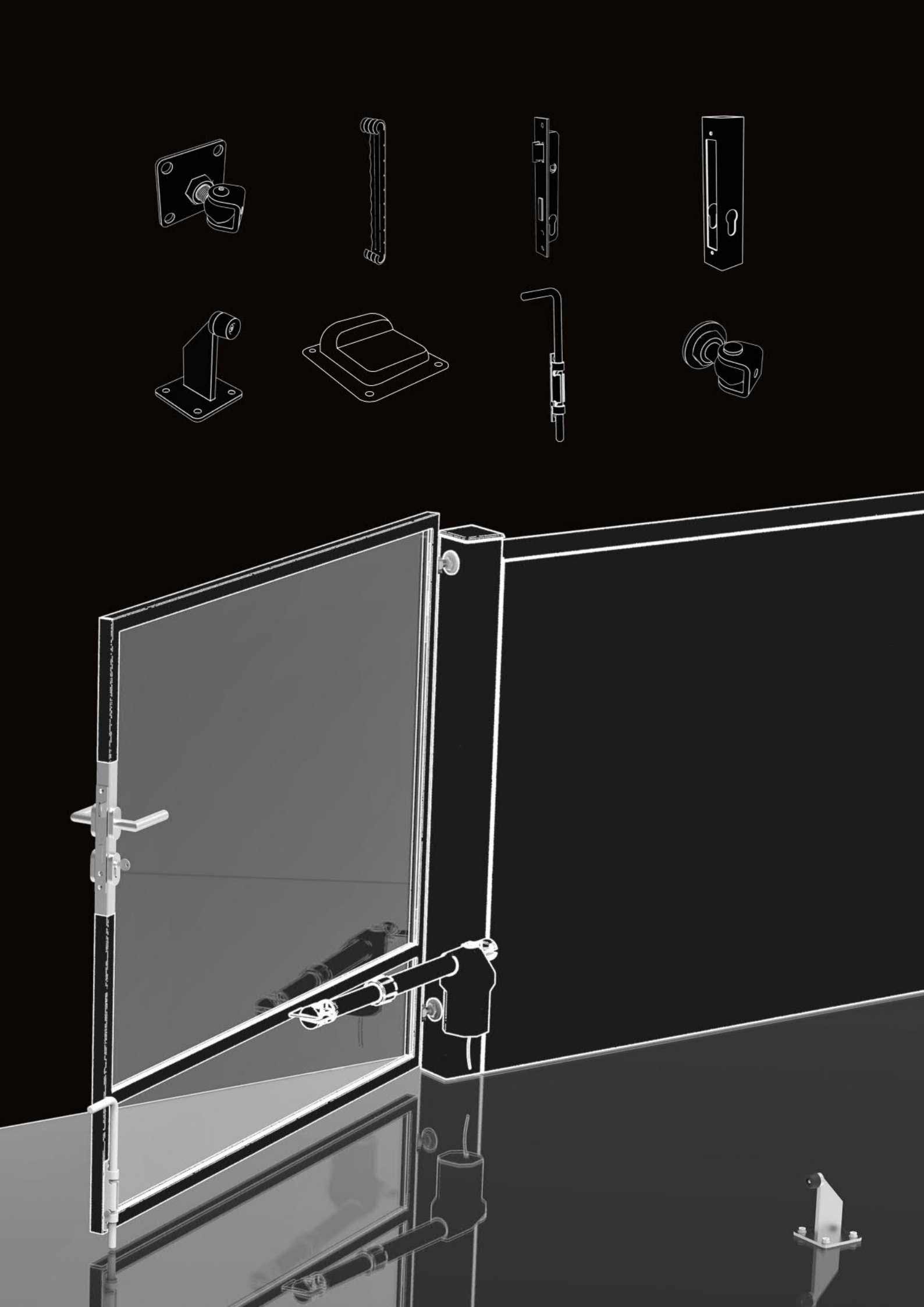

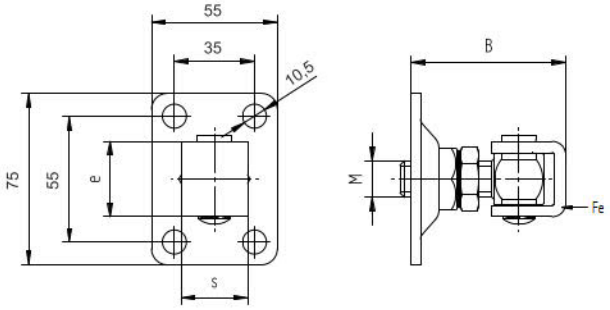

	Quality	Finish	M	B	e	s	Gmax (kg) 2xD4/53...	
D4/53-M12-K	Fe	Zn	12	56-63	27	20	40	new
D4/53A-M16-K			16	64-75	33	29	60	top

Q5/09-Quick-Fix QF5

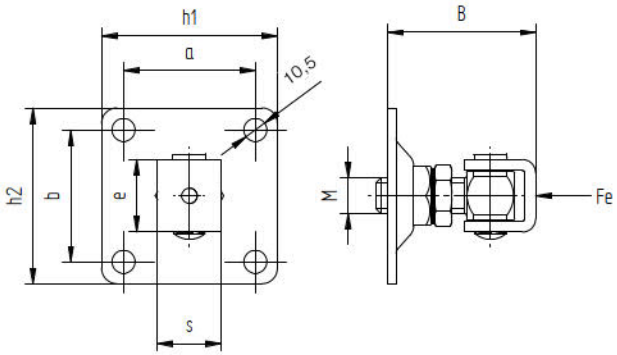

	Quality	Finish	M	B	h1xh2	a	b	e	s	Gmax (kg) 2xD4/53...	
D4/53-M16-K	Fe	Zn	16	64-75	80x80	55	55	33	29	60	top
D8/53-M16-K	AISI304	raw		64-80	75x75			45	30		
D4/53-M18-K	Fe	Zn	18	64-85	90x90	68	68	36		80	
D4/53-M20-K			20	69-90	100x100	74	74	43		100	
D8/53-M20-K	AISI304	raw				75	75	35			
D4/53-M24-K	Fe	Zn	24	79-115	120x120	90	90	50	35	150	

Q5/09-Quick-Fix QF5

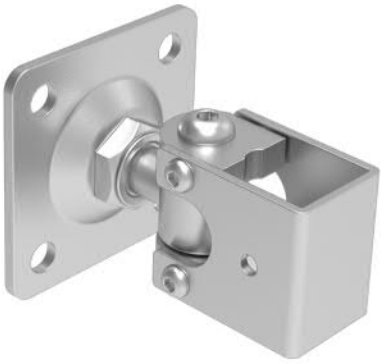

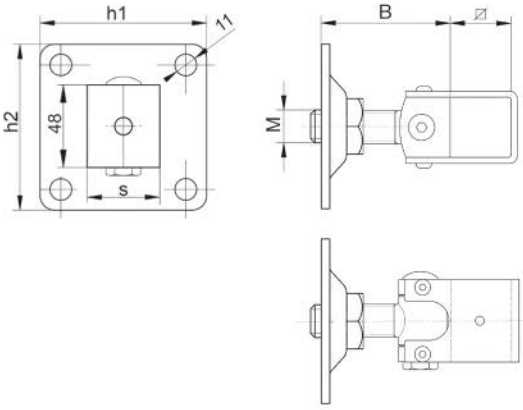

	Quality	Finish	Ø	M	B	h1xh2	s	Gmax (kg) 2xD4/53...	
D4/53-M16-30x30	Fe	Zn	30x30	16	55-75	80x80	38	200	new
D4/53-M20-40x40			40x40	20	65-85	100x100	48	300	new

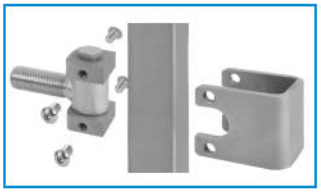

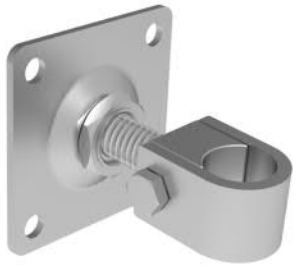

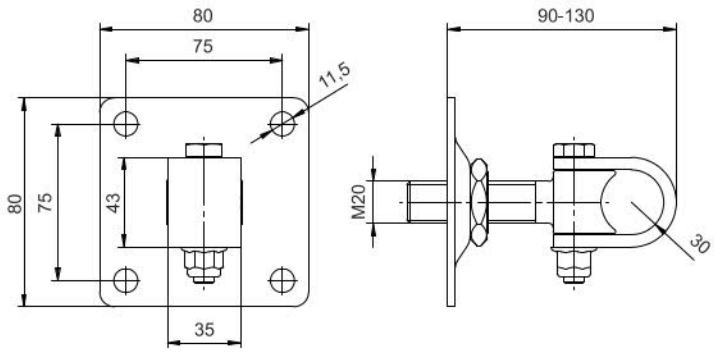

	Quality	Finish	Gmax (kg) 2xD4/58...
D4/58-M20	Fe	Zn	100

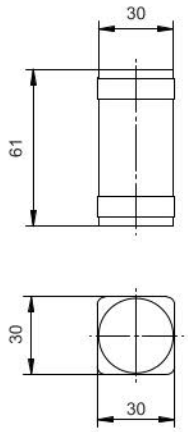

	Quality	Finish	Gmax (kg) 2xD4/58...
D4/45T-30	Fe	Zn	100

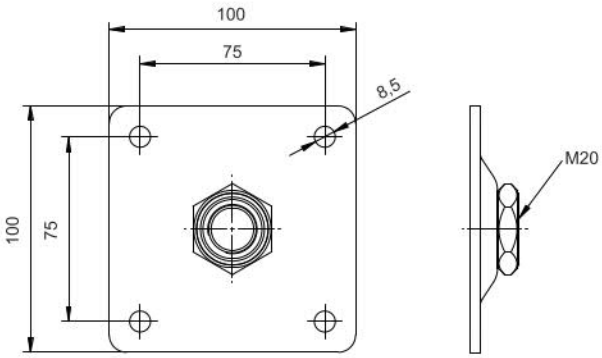

	Quality	Finish
D4/26A-M20	Fe	Zn

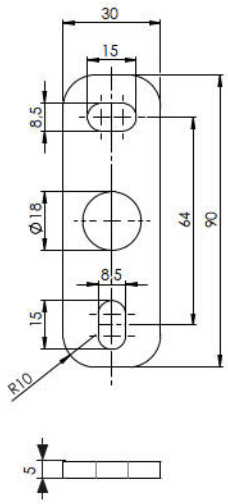

	Quality	Finish	
D4/30-30x90	Fe	raw	new
D8/30-30x90	AISI304		new

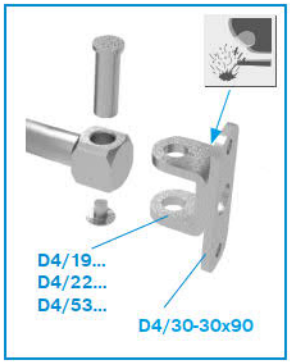

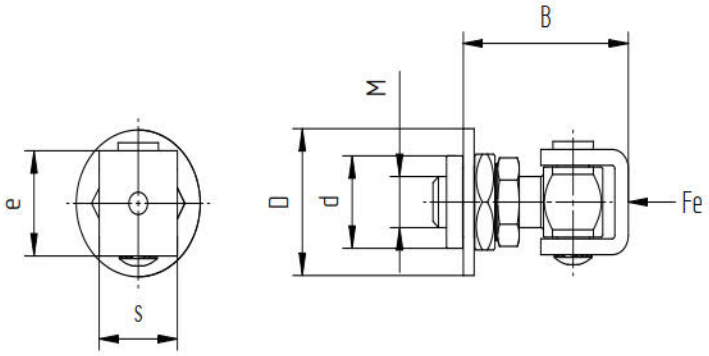

	Quality	Finish	M	B	d	D	e	s	Gmax (kg) 2xD4/22...	
D4/22-M12-K	Fe	Zn	12	45-53	27	40	27	20	40	new
D4/22-M16-K			16	54-65	29	46	33	29	60	top
D8/22-M16-K	AISI304	raw		54-75	30		35	30		
D4/22-M18-K	Fe	Zn	18	64-75	35	52	36,5		80	
D4/22-M20-K			20	64-80			42		100	
D8/22-M20-K	AISI304	raw		59-80	29		35			

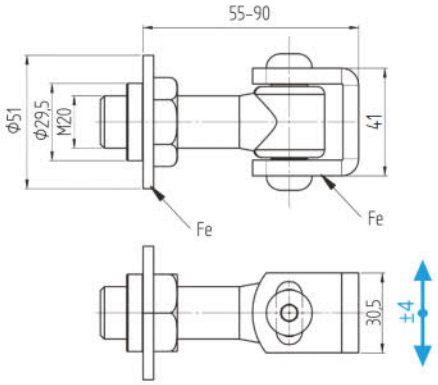

	Quality	Finish	Gmax (kg) 2xD4/22...	
D4/22-M20R	Fe	Zn	100	new

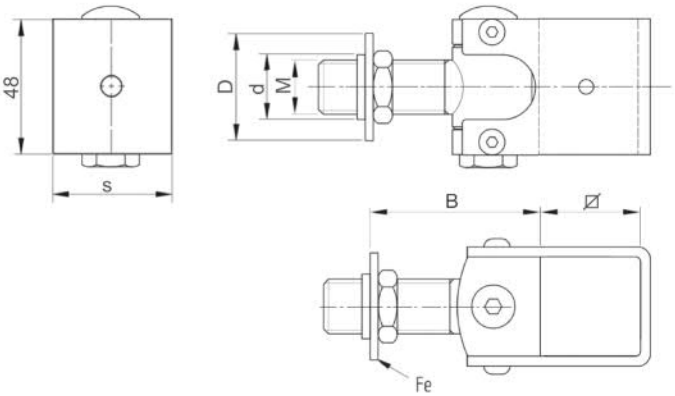

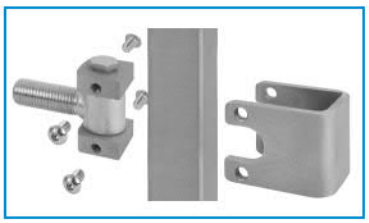

	Quality	Finish	Ø	M	B	d	D	s	Gmax (kg) 2xD4/22...	
D4/22-M16-30x30	Fe	Zn	30x30	16	55-75	25	52	38	200	new
D4/22-M20-40x40			40x40	20	65-85	29,3	50,8	48	300	new

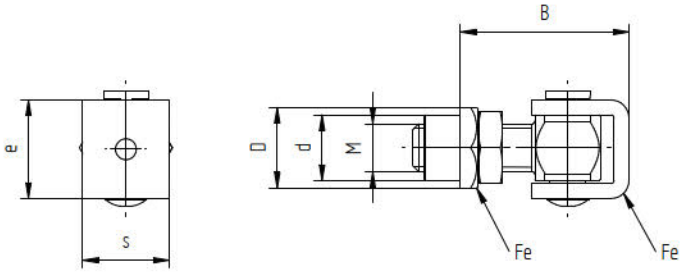

	Quality	Finish	M	B	d	D	e	s	Gmax (kg) 2xD4/19...
D4/19-M12-K	Fe	Zn	12	44-55	18	22	26	20	40
D4/19-M16-K			16	49-60	22	25	33	29	60
D4/19-M18-K			18	54-70	23	28	36	30	80
D4/19-M20-K			20	59-70	25	30	43	30	100

top

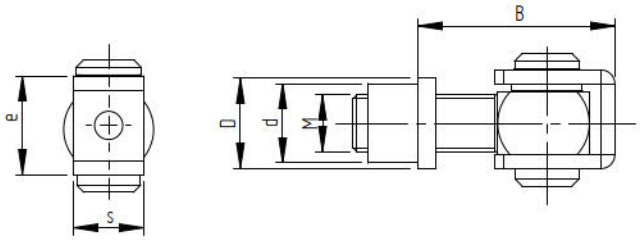

	Quality	Finish	M	B	d	D	e	s	Gmax (kg) 2xD8/19...
D8/19-M12	AISI304	raw	12	35-55	18	24	25	26	40
D8/19-M16			16	40-70	20	26	29	25	60
D8/19-M20			20	50-75	24	30	37	29	100

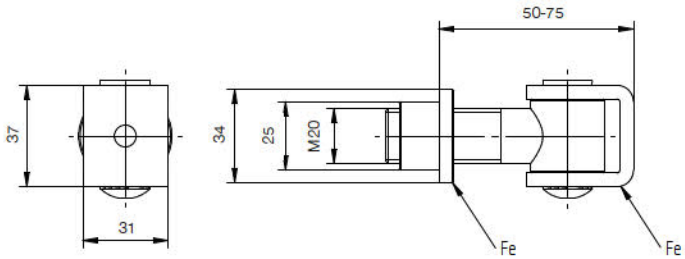

	Quality	Finish	Gmax (kg) 2xD4/19-M20-N1
D4/19-M20-N1	Fe	Zn	100

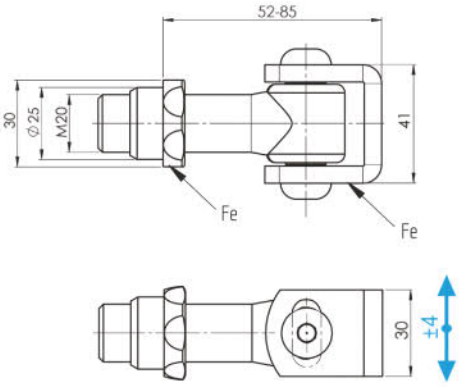

	Quality	Finish	Gmax (kg) 2xD4/19-M20R
D4/19-M20R	Fe	Zn	100

new

MODEL FLEX-ATYP

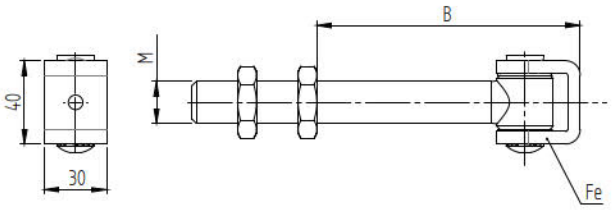

	Quality	Finish	M	B	Gmax (kg) 2xD4/67...
D4/67-M16	Fe	Zn	16	54-167	60
D4/67-M20			20	62-160	100

new

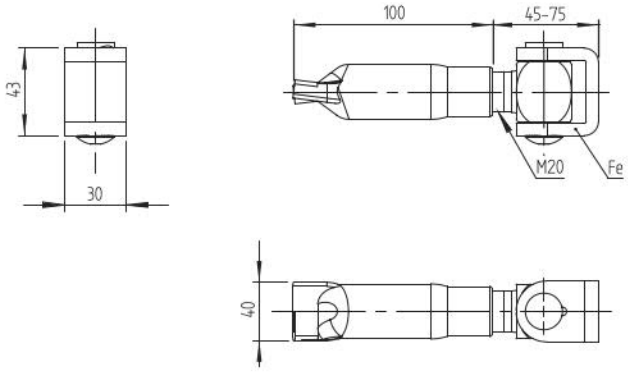

	Quality	Finish	Gmax (kg) 2xD4/63-M20
D4/63-M20	Fe	Zn	100

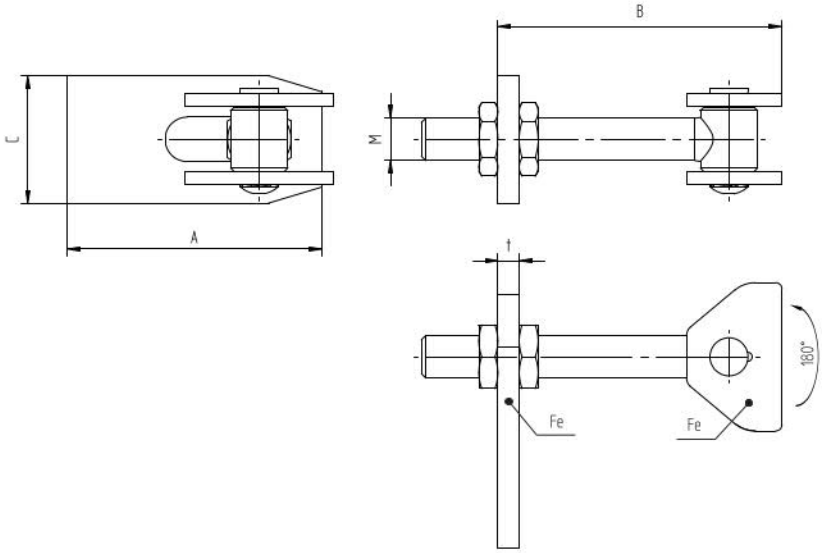

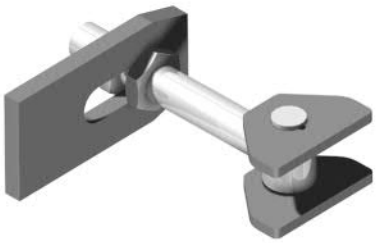

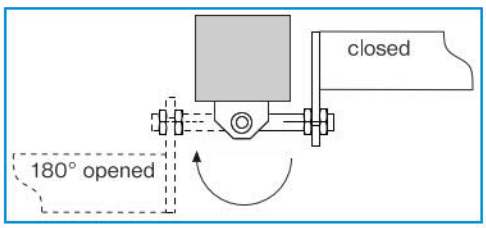

	Quality	Finish	M	A	B	t	Gmax (kg) 2xD4/64....
D4/64-M16	Fe	Zn	16	100	60-170	8	60
D4/64-M20			20	120+	65-160	10	100

new

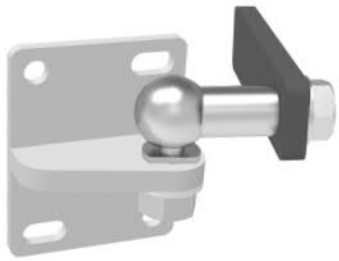

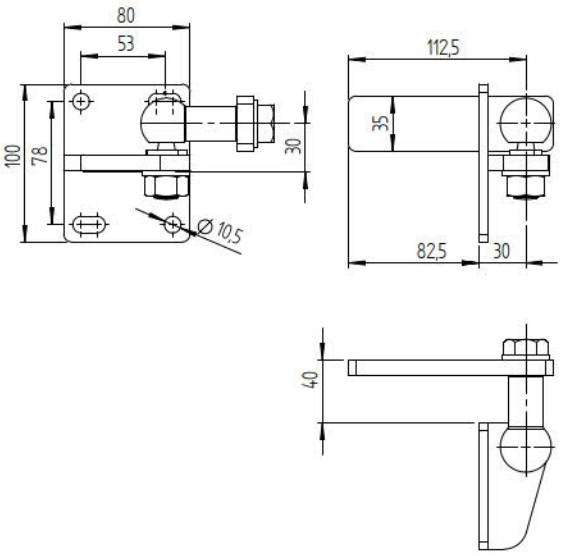

	Quality	Finish	Gmax (kg)
D4/78V	Fe	Zn	120

new

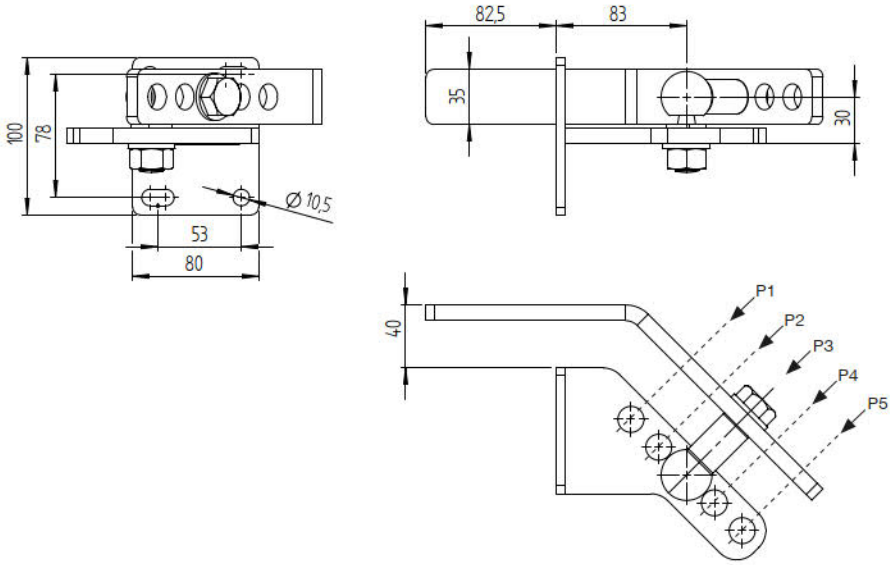

	Quality	Finish	Gmax (kg)
D4/78S	Fe	Zn	120

new

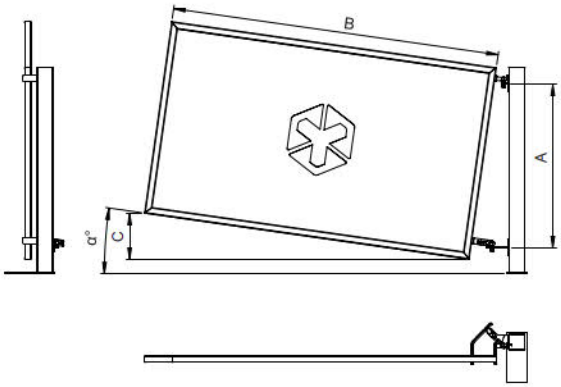

A	α					C (B=2000)				
	P1	P2	P3	P4	P5	P1	P2	P3	P4	P5
800	2,5°	5,1°	7,6°	10,1°	12,6°	88	176	264	351	436
1000	2,0°	4,1°	6,1°	8,1°	10,1°	70	141	211	281	351
1300	1,6°	3,1°	4,7°	6,2°	7,8°	54	109	163	217	271
1600	1,3°	2,5°	3,8°	5,1°	6,3°	44	88	132	176	220
1800	1,1°	2,3°	3,4°	4,5°	5,6°	39	78	118	157	195

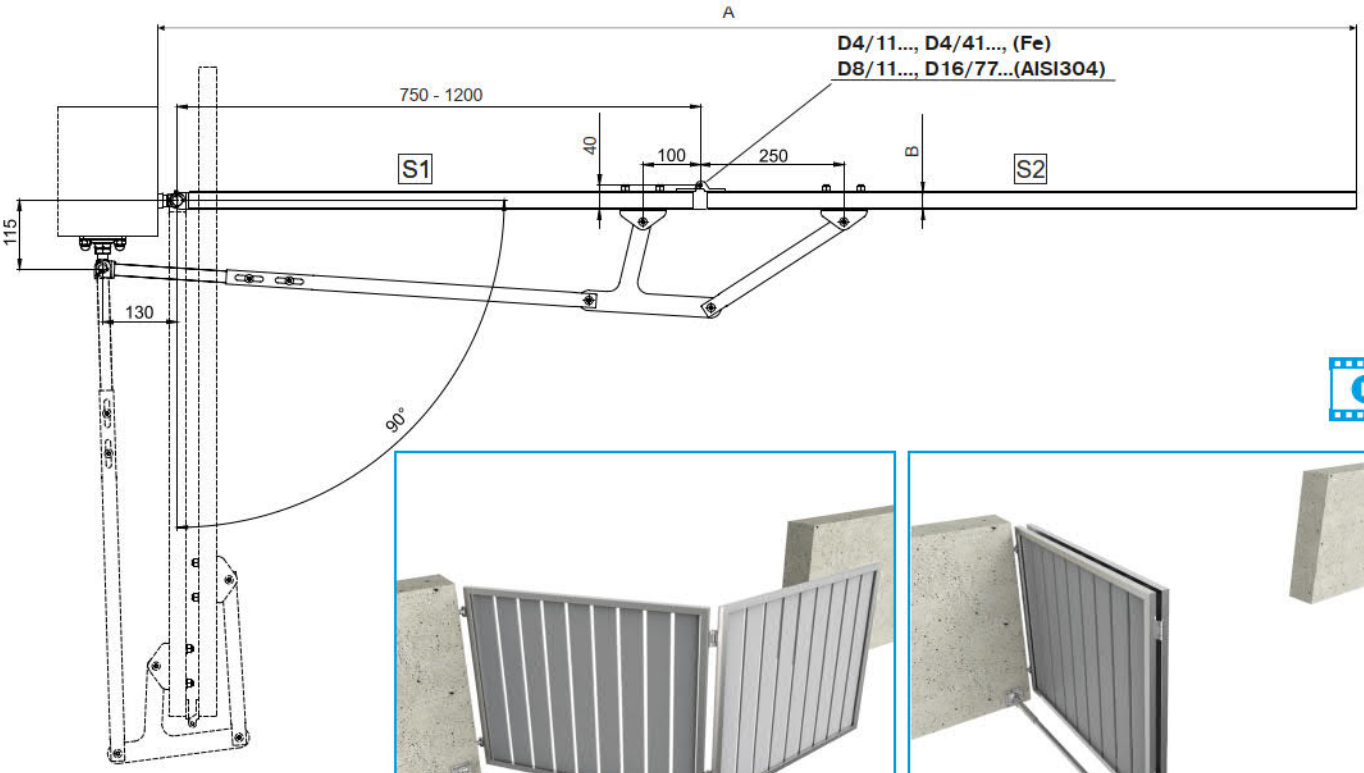

	Quality	Finish	A	B	max S2 (kg)
A-FS-110-D	AISI304	raw	1500-3000	30/40	100

new

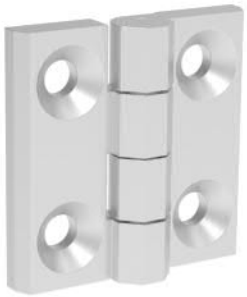

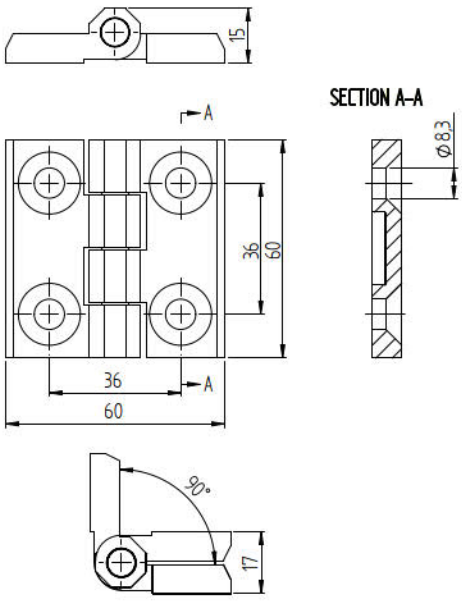

	Quality	Finish	Ø	Gmax (kg) 2xD16/73-70-000
D16/77-60	AISI316	raw	Flat	50

new

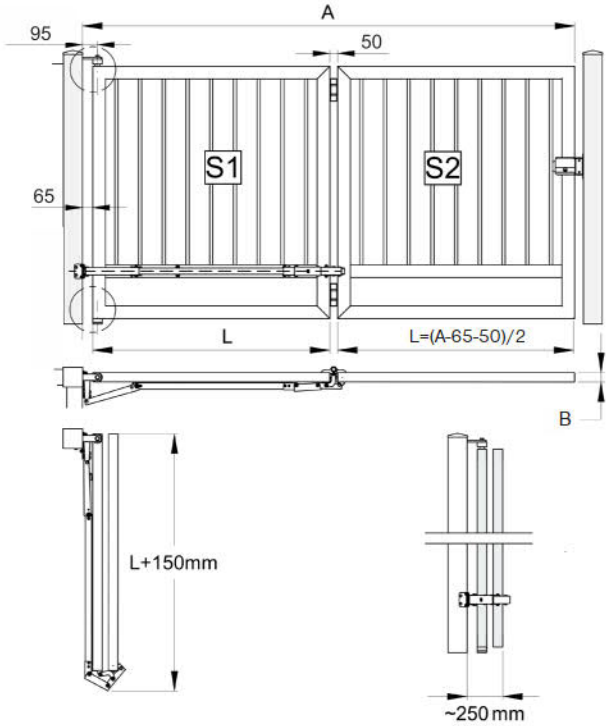

A	L	max S2 (kg)
2000	940	205
2500	1190	170
3000	1440	145
3500	1690	120
4000	1940	105
4500	2190	95
5000	2440	85

	Quality	Finish	A	B
FS-250	Fe	Zn	1900-5000	40/50/60

new

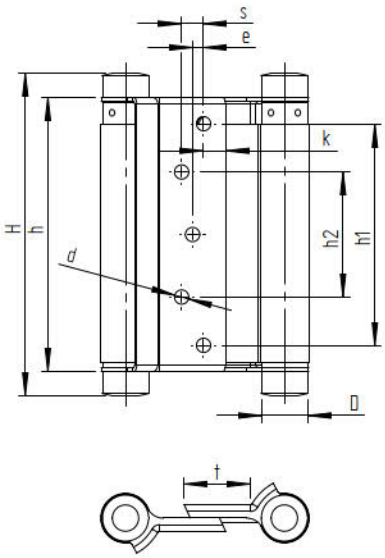

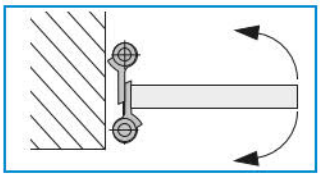

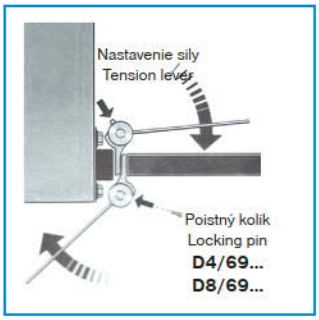

	Quality	Finish	H	h	h1	h2	D	d	k	s	e	t	Gmax (kg) 2xD4/69...	Spare locking pin	
D8/69-75	AISI304	satin	92	77	56	32	18	5,5	9	7	-	20	15	-	new
D8/69-100			117	102	77	42	18	5,5	10	7	-	22	22		new
D8/69-125			141	126	92	45	20	6,5	11	9	-	28	27		new
D4/69B-75	Fe	BRASS	98	75	54	21	21	4,5	8,5	6	-	22	15	D4/69-pinSS D8/69-pinSS	
D4/69B-100			122	100	78	45	21	5,5	8	9	-	24	22		
D4/69B-125			147	125	101	57	21	5,5	10	11	5	31	27		
D4/69B-150			172	150	126	80	26	5,5	9	14	6	42	40	D4/69-pinBS D8/69-pinBS	
D4/69N-75		Ni	97	75	55	24	20	4,5	8	4	-	22	15		
D4/69N-100			124	100	76	43	22	4,5	9	7	-	28	22		
D4/69N-125			148	125	102	57	22	5	9,5	11	6	32	27		
D4/69N-150			172	150	126	80	26	5,5	9,5	14	8	42	40		

	Quality	Finish
D4/69-pinSS	Fe	Zn
D8/69-pinSS	AISI304	raw
D4/69-pinBS	Fe	Zn
D8/69-pinBS	AISI304	raw

Náhradný poistný kolík
Spare locking pin

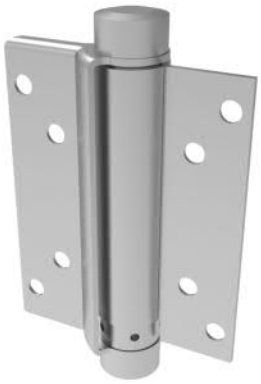

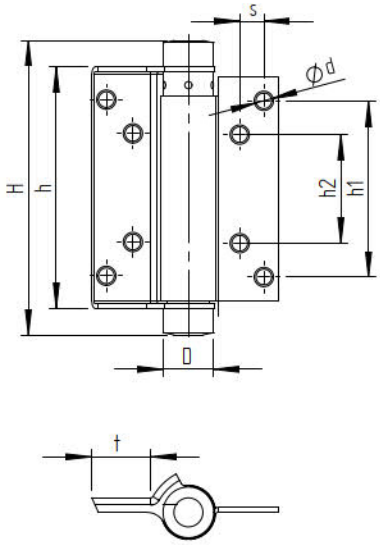

	Quality	Finish	H	h	h1	h2	D	d	k	s	t	Gmax (kg) 2xD4/72...	Spare locking pin	
D4/72Fe-100	Fe	raw	122	100	78	45	21	5,5	8,5	9	25	22	D4/69-pinSS D8/69-pinSS	
D4/72N-100		Ni												
D8/72i-75	AISI304	raw	93	77	53	26	18	5,5	9	6		15		new
D8/72i-100			117	102	78	43	18	5,5	10,5	7		22		
D8/72i-125			141	126	92	45	20	6,5		9	31	27		new

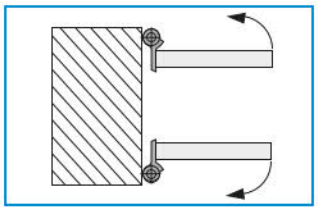

MODEL SPRING/HYDRAULIC

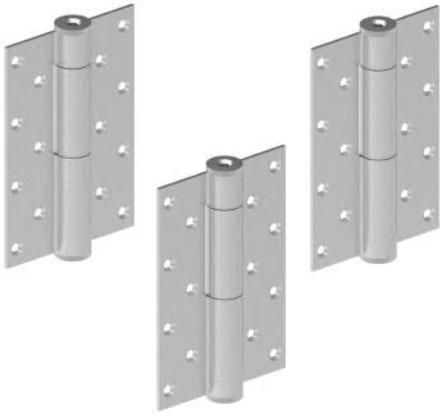

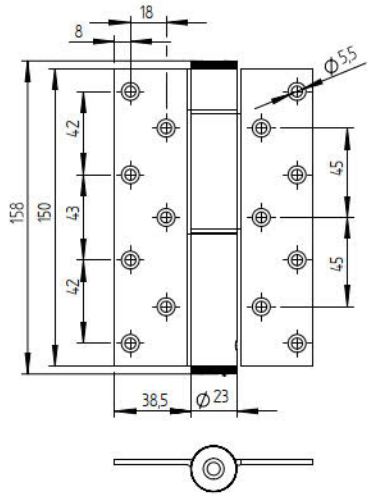

	Quality	Finish	Springe Hinge	Hydraulic Hinge	Gmax (kg)	
D8/82-150-L	AISI304	raw	2x	1x	85	new
D8/82-150-R						new

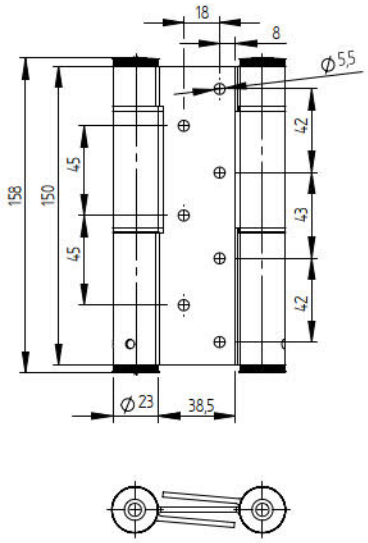

	Quality	Finish	Springe Hinge	Hydraulic Hinge	Gmax (kg)	
D8/79-150	AISI304	raw	2x	1x	50	new

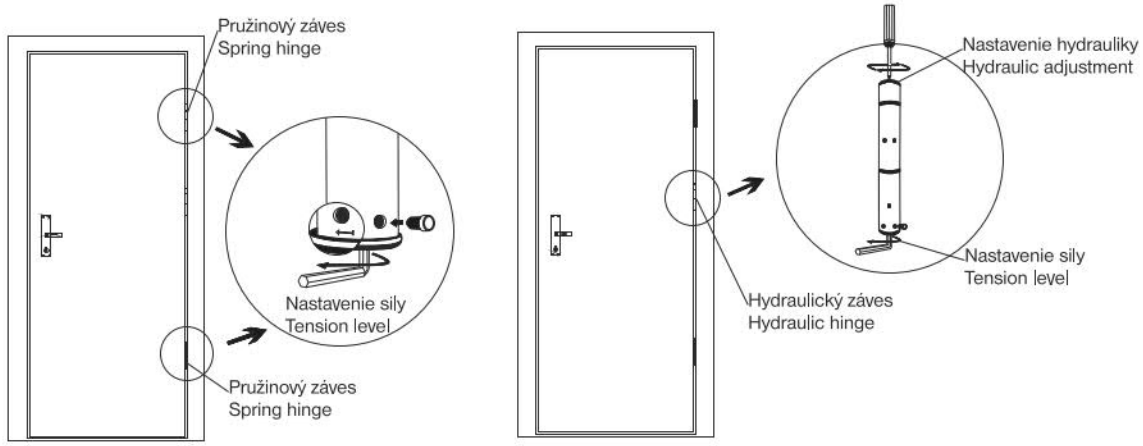

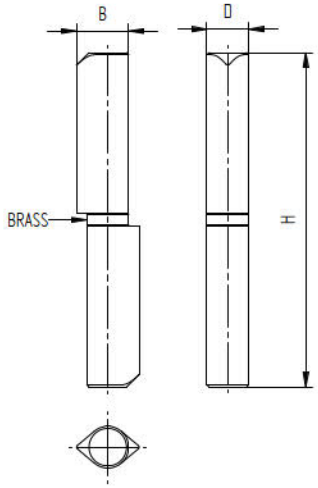

	Quality	Finish	D	H	B	Gmax (kg) 2xD4/11...
D4/11-40	Fe	raw	10	40	13	20
D4/11-60				60	14	
D4/11-80			12	80	16	40
D4/11-100			14	100	18	50
D4/11-120			16	120	20	60
D4/11-140				140	21	

top

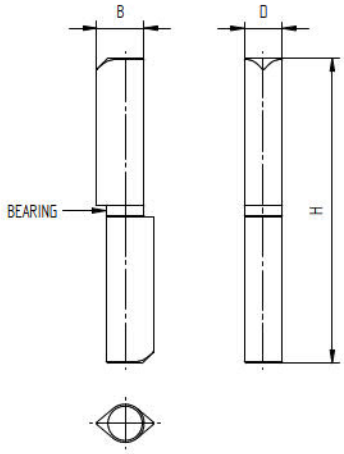

	Quality	Finish	D	H	B	Gmax (kg) 2xD4/11...
D4/11-160	Fe	raw	20	160	25	80
D4/11-180			20	180	27	100
D4/11-200			22	200	29	

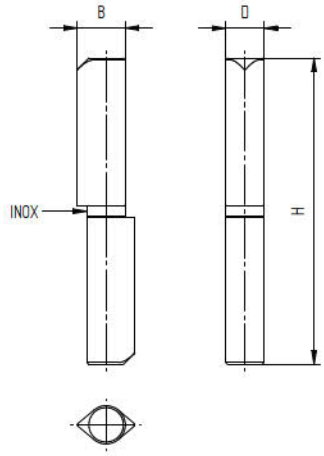

	Quality	Finish	D	H	B	Gmax (kg) 2xD8/11...
D8/11-60	AISI304	raw	10	60	12	20
D8/11-100			14	100	16	50
D8/11-120			16	120	18	60

MODEL FIX

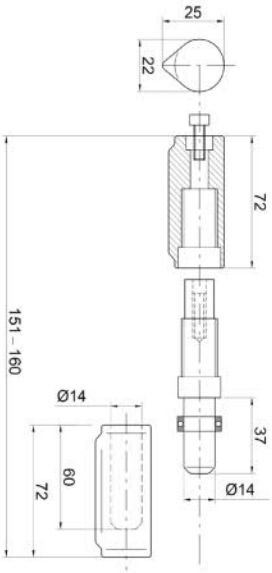

	Quality	Finish	Gmax (kg) 2xD4/11-150R	
D4/11-150R	Fe	raw	100	new

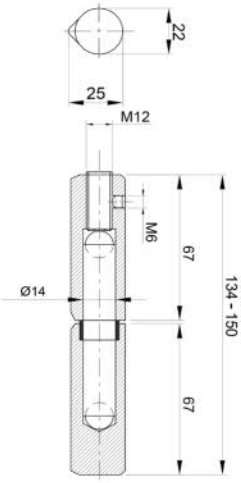

	Quality	Finish	Gmax (kg) 2xD4/11-150RD	
D4/11-150RD	Fe	raw	100	new

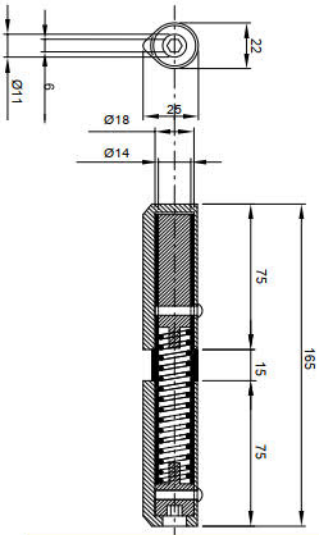

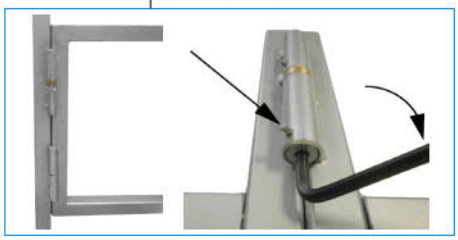

	Quality	Finish	Gmax (kg) 2xD4/11...	
D4/11-165S	Fe	raw	60	new
D8/11-165S	AISI304			new

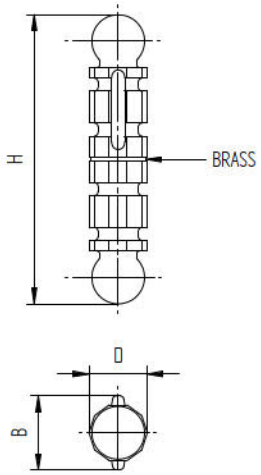

	Quality	Finish	D	H	B	Gmax (kg) 2xD4/41...
D4/41-21	Fe	raw	21	110	28	60
D4/41-25			25	130	35	80
D4/41-30			30	155	45	100

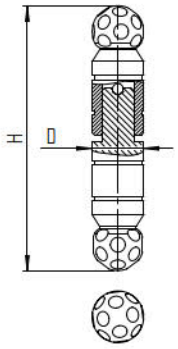

	Quality	Finish	D	H	Gmax (kg) 2xD4/47...
D4/47-100	Fe	raw	20	105	60
D4/47-122			24	125	80
D4/47-146			30	142	100
D4/47-195				195	120

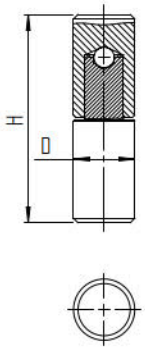

	Quality	Finish	D	H	Gmax (kg) 2xD4/60...
D4/60-70	Fe	raw	20	70	80
D4/60-90			27	90	100

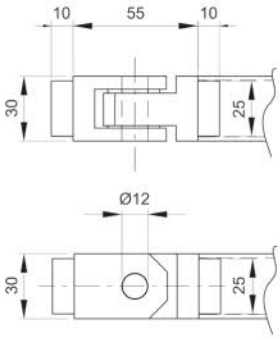

	Quality	Finish
D4/110-30x30	Fe	raw

new

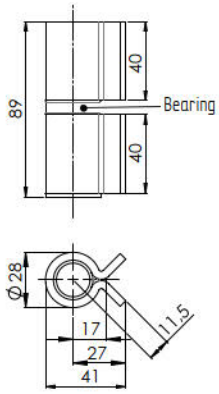

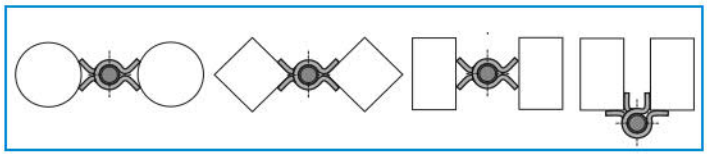

	Quality	Finish	Gmax (kg) 2xD4/13L
D4/13L	Fe	raw	80

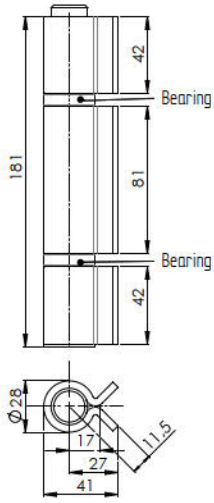

	Quality	Finish	Gmax (kg) 2xD4/14L
D4/14L	Fe	raw	120

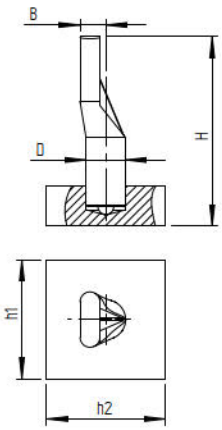

	Quality	Finish	B	D	H	h1xh2	Gmax (kg)
D4/32-20	Fe	Zn	12	20	90	60x60	200
D4/32-24			23	24	100	70x70	300

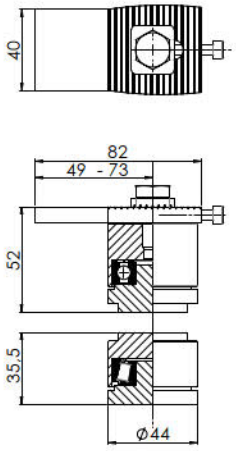

	Quality	Finish	Gmax (kg)		
D4/52	Fe	Zn	250	+	D4/52-K

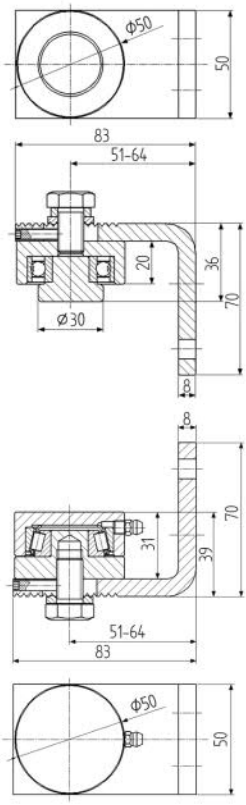

	Quality	Finish	Gmax (kg)
D4/52-D50	Fe	Zn	400

new

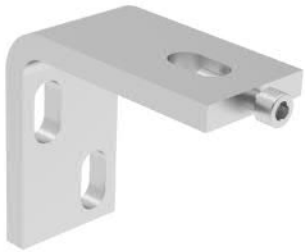

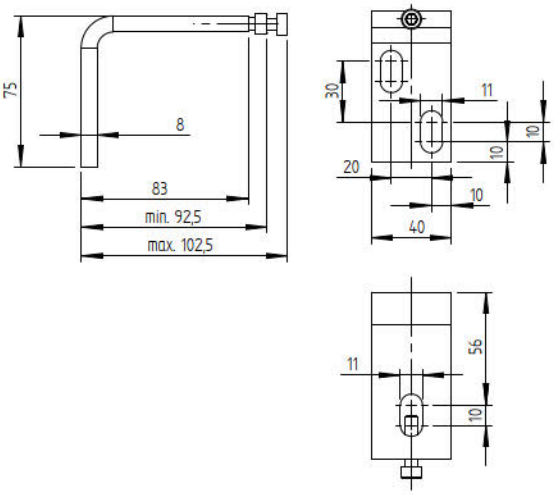

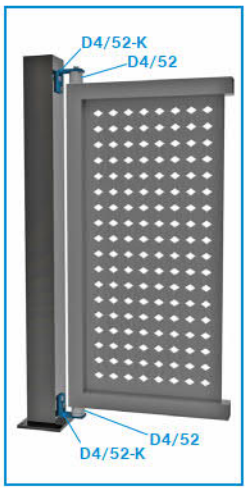

	Quality	Finish
D4/52-K	Fe	Zn

new

MODEL FIX

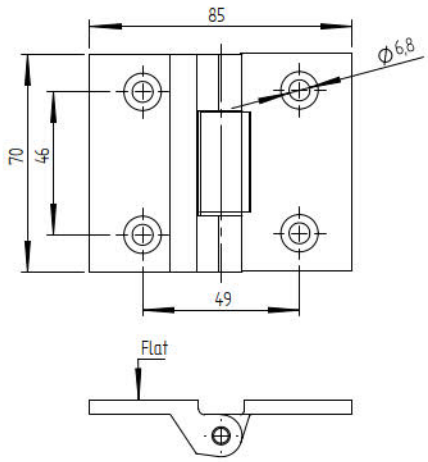

	Quality	Finish	Ø	Gmax (kg) 2xD16/73-70-000
D16/73-70-000	AISI316	satin	Flat	50

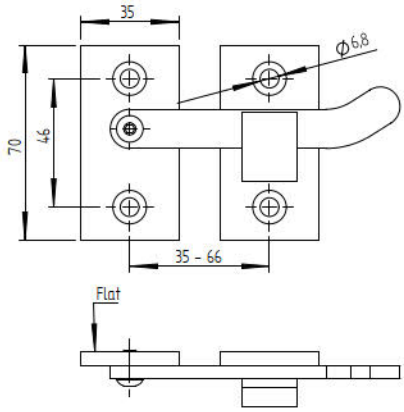

	Quality	Finish	Ø
D16/74-70-000	AISI316	satin	Flat

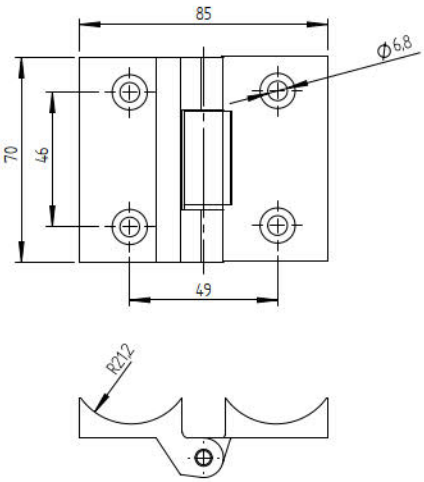

	Quality	Finish	Ø	Gmax (kg) 2xD16/73-70-042
D16/73-70-042	AISI316	satin	42,4	50

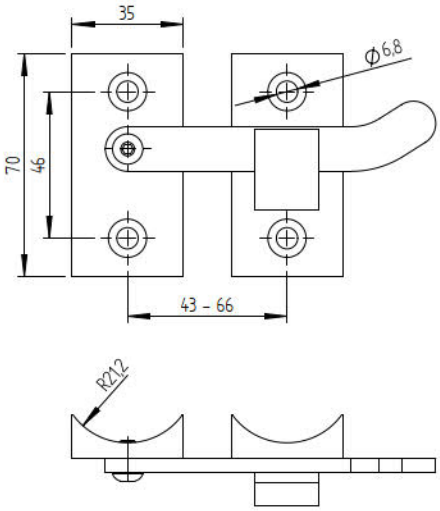

	Quality	Finish	Ø
D8/74-70-042	AISI304	satin	42,4
D16/74-70-042	AISI316		

new

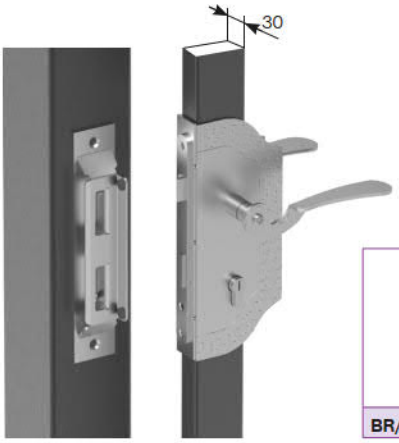

set	Quality								
BR/30x30-set S	Fe/Zn	B1/62U-40	B1/34-32A	D1/14AL	D1/14AR	B1/33-30	B1/30-50A	B1/19N	D2/28-Zn

set	Quality							
BR/30x30-set	Fe/Zn	B1/07T-30	B1/09-50M	E2/258-30x30	B1/52J-30x30	B1/30-17x82	B1/19N	D2/07-Zn
BR/50x30-set					B1/58J-50x30	B1/30-35x90		

set	Quality					
BR/40x40-set	Fe/Zn	B1/62U-40	B1/58J-40x40	B1/30-22x90	B1/19N	D2/28-Zn
BR/60x40-set			B1/58J-60x40	B1/30-40x90		
BR/80x40-set			B1/58J-80x40	B1/30-50A		

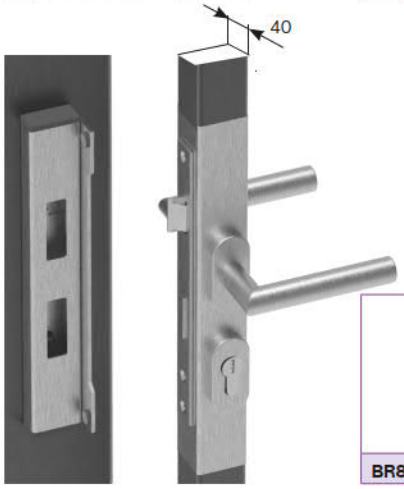

set	Quality					
BR8/40x40-set	AISI304	B8/62-40x20	B8/39J-40x40	B8/30-23x85	B1/19N	D8/05-i

new

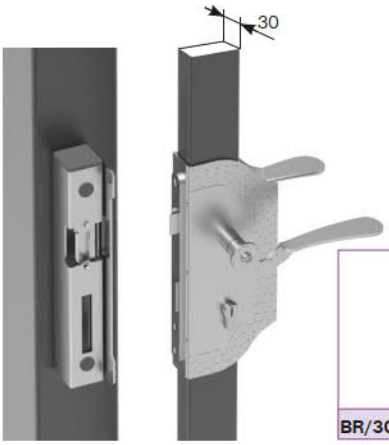

set	Quality	12-24Vac/Vdc								
BR/30x30-set ES	Fe/Zn	B1/18-LC	B1/61U-40	B1/34-32A	D1/14AL	D1/14AR	B1/33-30	B1/30-50A	B1/19N	D2/28-Zn

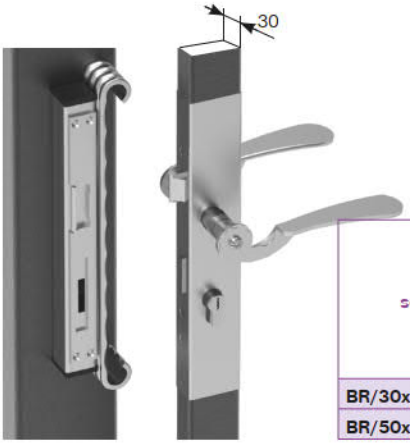

set	Quality	6-14 Vac/Vdc							
BR/30x30-set E	Fe/Zn	B1/18-I	B1/07T-30	B1/09-50M	E2/258-30x30	B1/52J-30x30	B1/30-17x82	B1/19N	D2/07-Zn
BR/50x30-set E						B1/58J-50x30	B1/30-35x90		

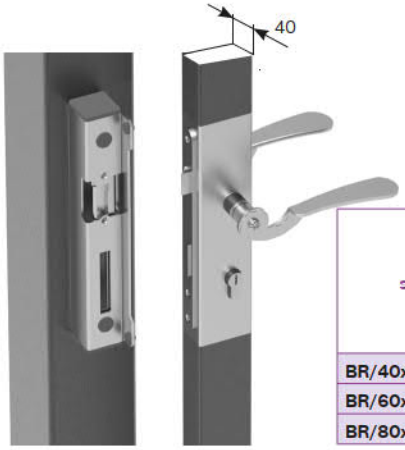

set	Quality	12-24Vac/Vdc						
BR/40x40-set E	Fe/Zn	B1/18-LC	B1/61U-40	B1/58J-40x40	B1/30-22x90	B1/19N	D2/28-Zn	new
BR/60x40-set E				B1/58J-60x40	B1/30-40x90			
BR/80x40-set E				B1/58J-80x40	B1/30-50A			

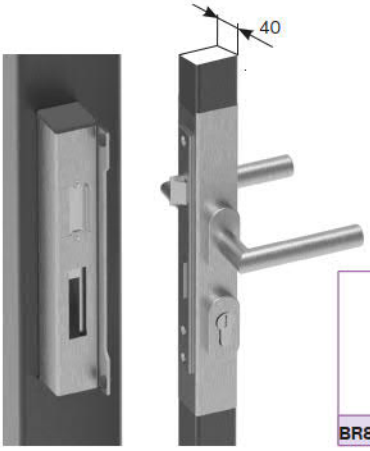

set	Quality	12-24Vac/Vdc					
BR8/40x40-set E	AISI304	B1/18-LC	B8/61-40x40	B8/39J-40x40	B8/30-23x85	B1/19N	D8/05-i

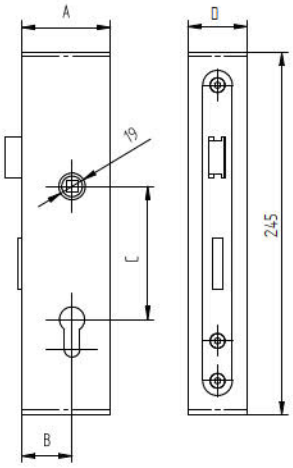

	Quality	Finish	A	B	C	D	
B1/60-40x40	Fe	raw	40	21,5	90	40	
B1/59-50x30			50	34	72	30	new
B1/59-60x40			60			40	

B1/62U-40
B1/61U-40
B1/07T-40

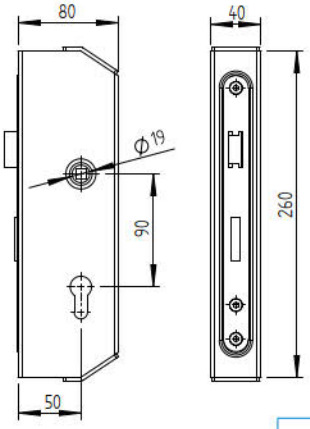

	Quality	Finish
B1/48-80x40	Fe	raw

B1/62U-40
B1/61U-40
B1/07T-40

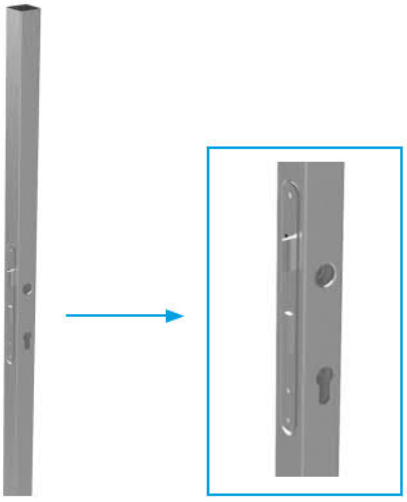

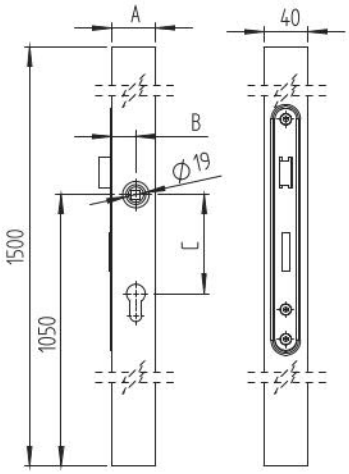

	Quality	Finish	A	B	C	
B1/63-40x40x1500	Fe	raw	40	22	90	new
B1/63-60x40x1500			60	34	72	new

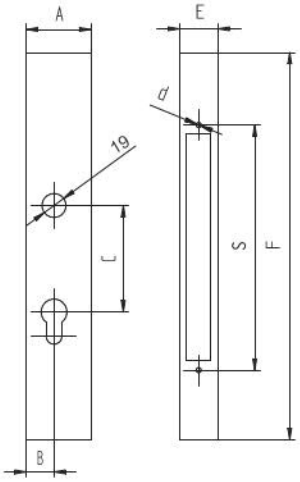

	Quality	Finish	A	B	C	E	F	d	s		
B8/58J-40x40	AISI304	satin	40	19	90	40	260	4	200	B1/30-22x90	new
B1/58J-40x40	Fe	raw									
B1/58J-50x30			50	32,5		30		3,8	216	B1/30-35x90	
B1/58J-60x40			60	37,5		40		3,0	210	B1/30-40x90	
B1/58J-80x40			80	47				4,0		B1/30-50A	
B8/39J-40x40	AISI304	satin	40	19	85		300	3,8		B8/30-23x85	new
B1/39J-40x40	Fe	raw								B1/30-23x85	
B1/39J-50x30			50			30					
B1/52J-30x30			30	13	82	30		3,8	190	B1/30-17x82	
B1/52J-40x40			40	22		40		3,5		B1/ 30-25,5x82	
B1/52J-50x30			50			30		3,8			

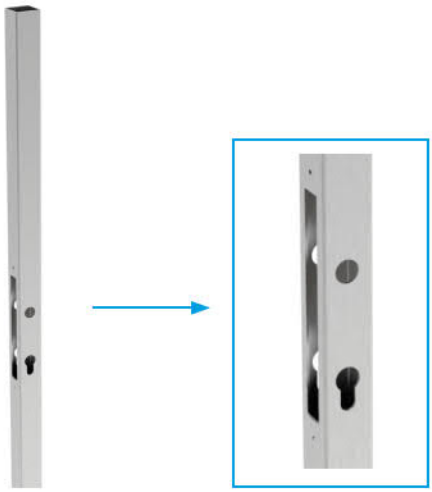

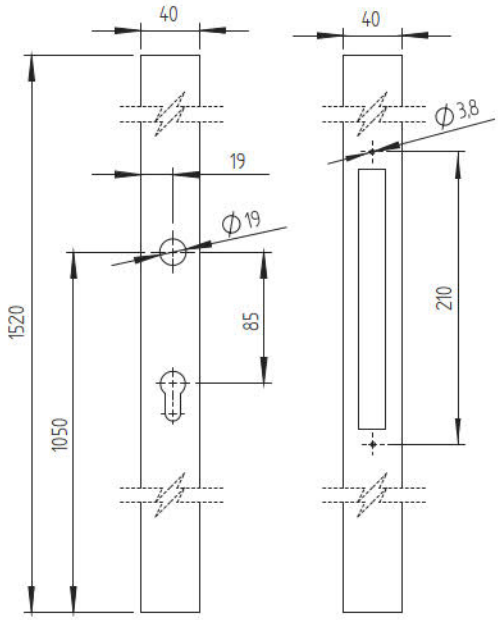

	Quality	Finish		
B8/63-40x40x1500	AISI304	raw	B8/30-23x85	new

LOCK SETS, BOXES

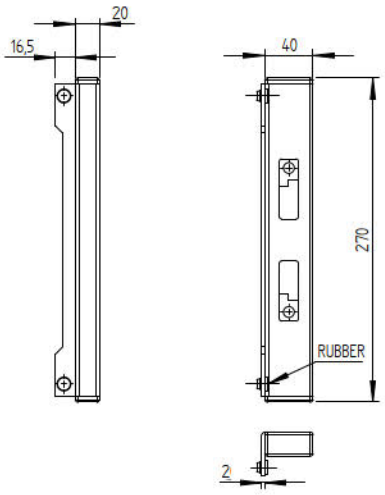

	Quality	Finish	
B8/62-40x20	AISI304	satin	new

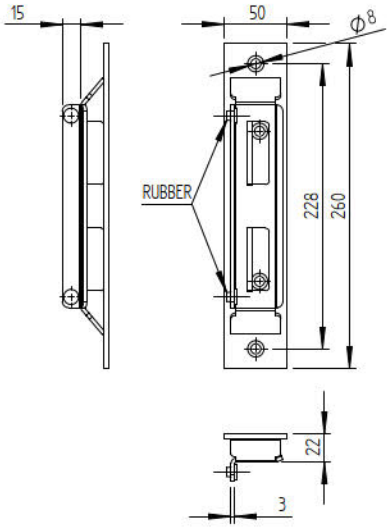

	Quality	Finish	
B1/62U-40	Fe	Zn	top

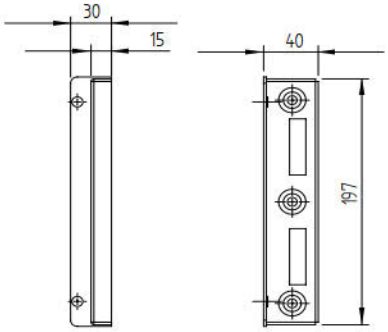

	Quality	Finish	
B1/62U-40x30	Fe	Zn	new

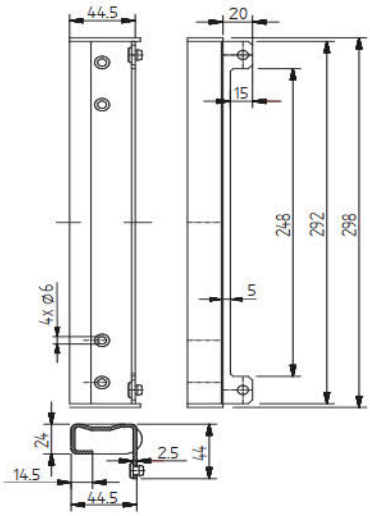

	Quality	Finish	
B1/62U-45x45	Fe	Zn	new

	Quality	Finish	
B8/61-40x40	AISI304	satin	new

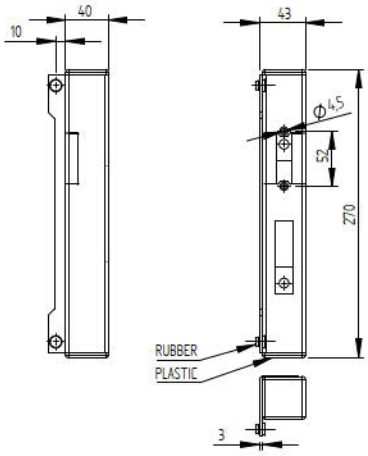

B1/18-LC B1/18-F

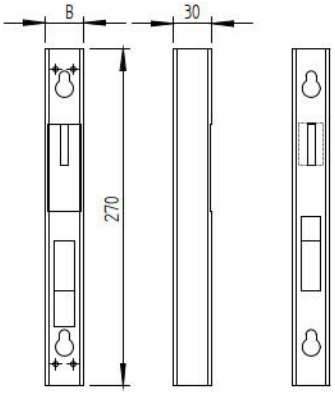

	Quality	Finish	B	
B1/07T-30	Fe	raw	30	
B8/07T-30	AISI304	satin		new
B1/07T-40	Fe	raw	40	
B8/07T-40	AISI304	satin		new

Univerzálny doraz pre klasický alebo elektromagnetický zámok.
Universal stop box for clasical or electromagnetic lock.

B1/07T-...
B8/07T-...

B1/18-I

B1/18-I

	Quality	Finish
B1/61U-40	Fe	Zn

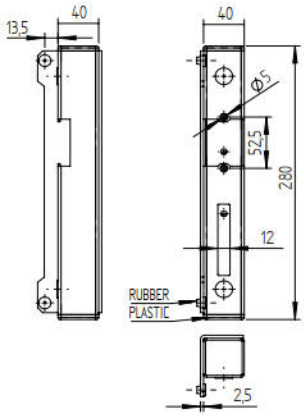

B1/18-LC B1/18-F

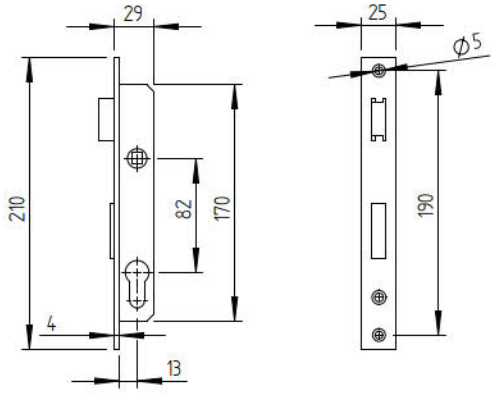

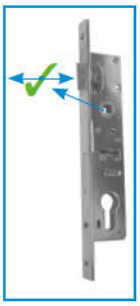

B1/52J-30x30

	Quality	Finish
B1/30-17x82	Fe	Zn

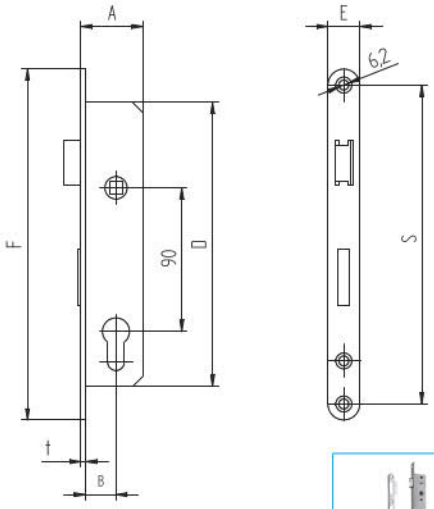

HOBES

	Quality	Finish	A	B	D	E	F	s	t
B1/30-22x90	Fe	Zn	39	19	178	20	220	200	3
B1/30-25x90			40	22,5	175	22	235	216	2,5
B1/30-35x90			50	32,5	177				

top

B1/30-22x90	B1/58J-40x40 B8/58J-40x40
B1/30-25x90	-
B1/30-35x90	B1/58J-50x30

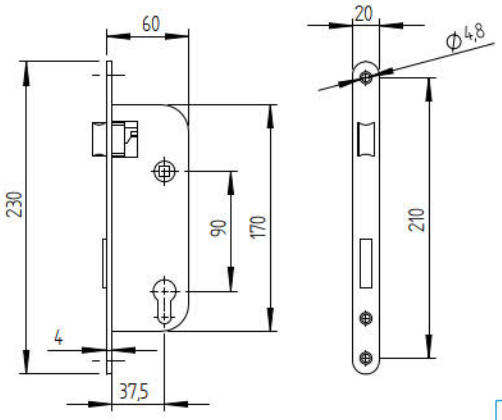

B1/58J-60x40

	Quality	Finish
B1/30-40x90	Fe	Zn

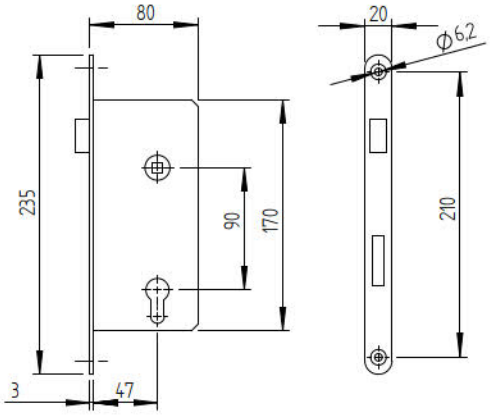

	Quality	Finish
B1/30-50A	Fe	Zn

B1/58J-80x40

B1/30-23x85

B8/30-23x85

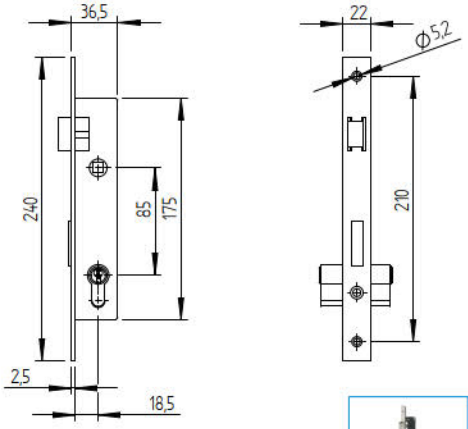

	Quality	Finish
B1/30-23x85	Fe	Zn
B8/30-23x85	AISI304	satin

B1/30-23x85	B1/39J-40x40 B1/39J-50x30
B8/30-23x85	B8/39J-40x40

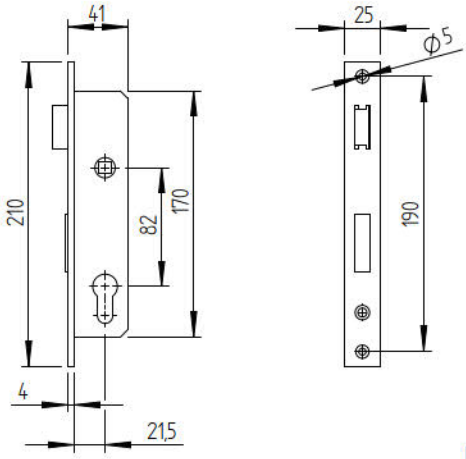

	Quality	Finish
B1/30-25,5x82	Fe	Zn

B1/52J-40x40
B1/52J-50x30

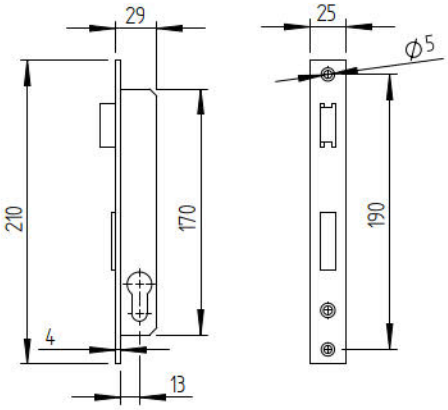

	Quality	Finish
B1/30-17G	Fe	Zn

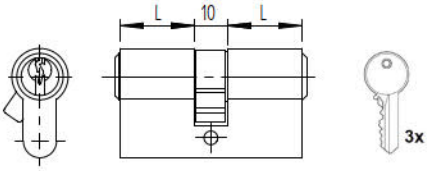

	Quality	Finish	L	
B1/19N	BRASS	Ni	22,5	
B1/19N-60			25	new
B1/19N-70			30	new

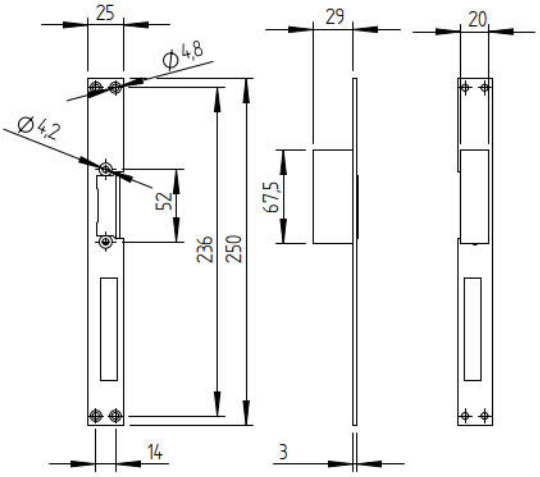

	Quality	Finish	Power supply
B1/18-I	Fe	Zn	6-14 Vac/Vdc

V kludovom stave zablokovany/Locked in default state

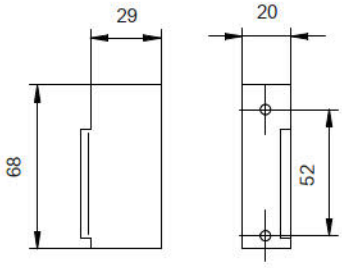

	Quality	Finish	Power supply
B1/18-LC	Fe	Zn	12-24 Vac/Vdc

V kľúdovom stave zablokovaný/Locked in default state

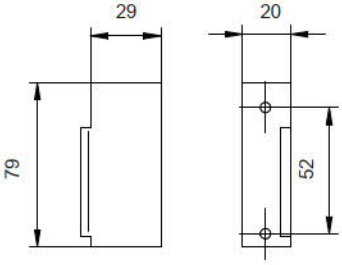

	Quality	Finish	Power supply
B1/18-F	Fe	Zn	12-24 Vac/Vdc

new

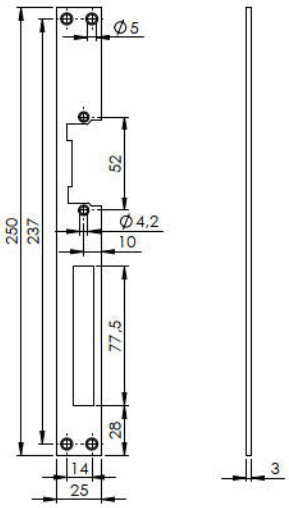

	Quality	Finish
B8/18-FP	AISI304	raw

new

LOCKS

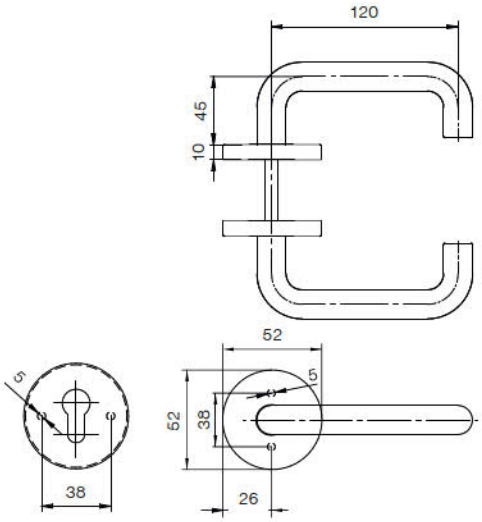

	Quality	Finish	Model
D8/01-i	AISI304	satin	K02

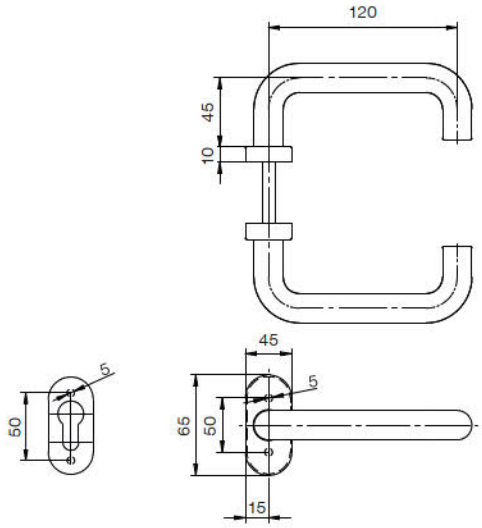

	Quality	Finish	Model
D8/03-i	AISI304	satin	K02
D8/03-BLACK		RAL	

new

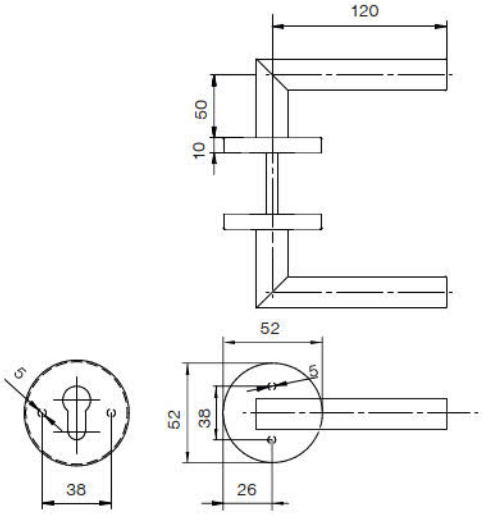

	Quality	Finish	Model
D8/02-i	AISI304	satin	K02

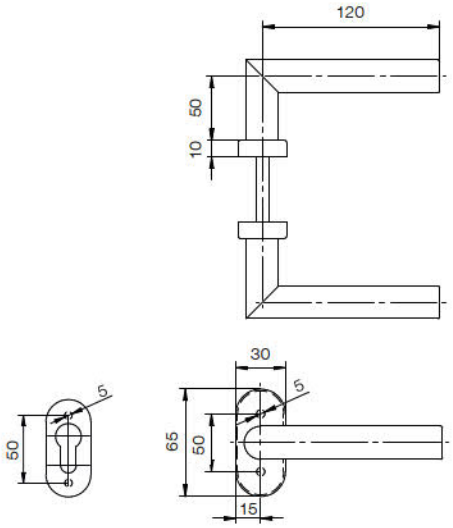

	Quality	Finish	Model
D8/05-i	AISI304	satin	K02
D8/05-BLACK		RAL	

top
new

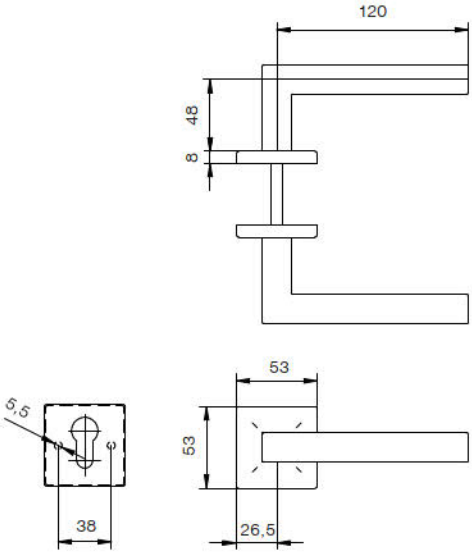

	Quality	Finish	Model
D8/06-i	AISI304	satin	K01

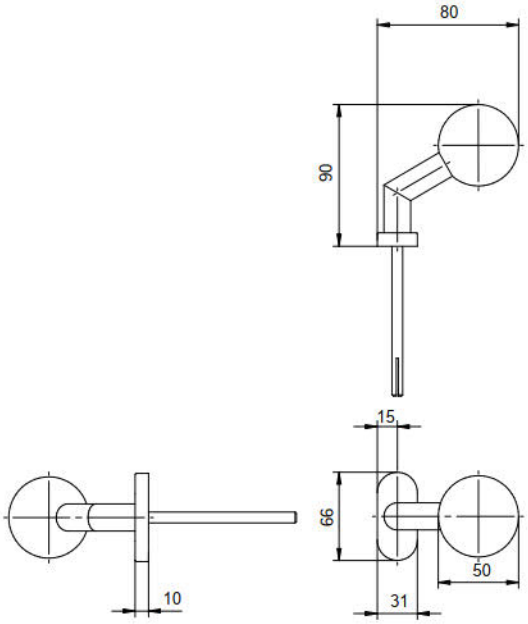

	Quality	Finish	Model
D8/04-i	AISI304	satin	K01
D8/04-BLACK		RAL	

new

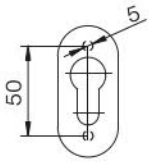

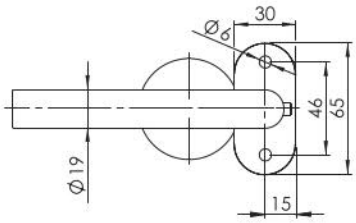

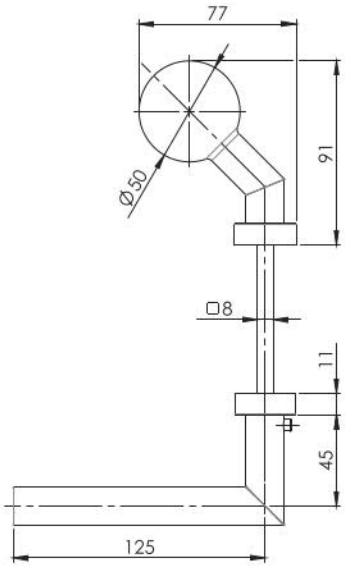

	Quality	Finish	Model	Orientation	
D8/05G-R-i	AISI304	satin	K02,K11	right	top
D8/05G-L-i				left	top

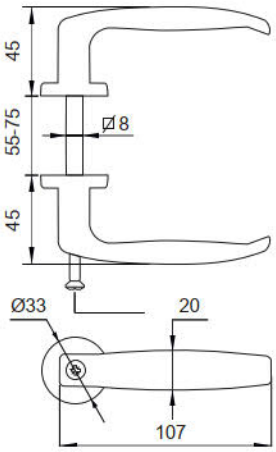

	Quality	Finish	Model
D2/29	ALUMINIUM	black	K03

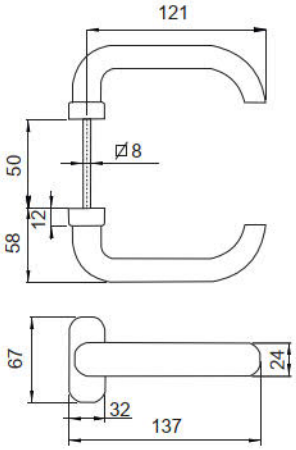

	Quality	Finish	Model
D2/30	PVC	raw	K03

D2/07-Zn

D2/11-Zn

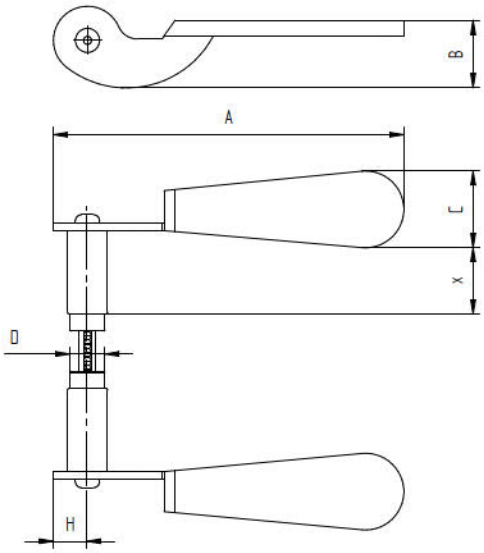

D2/34-Zn

D2/56

D2/28-Zn

D2/52-Zn

D2/05T-Zn

D2/57

	Quality	Finish	A	B	C	D	X	H	Model
D2/07-Zn	Fe	Zn	145	60	19	17,5	42	12	K11
D2/11-Zn			132	45	48		28	15	
D2/34-Zn			152	50	40		34	17	K12
D2/28-Zn			145	42	37		36	17	
D2/05T-Zn			143	60	35		41	17	
D2/52-Zn			145	45	35		49	17	K13
D2/56	Fe	raw	150	48	40	19	37	18	K14
D2/57			160	54	50		25	19	

top

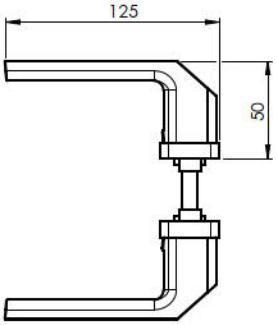

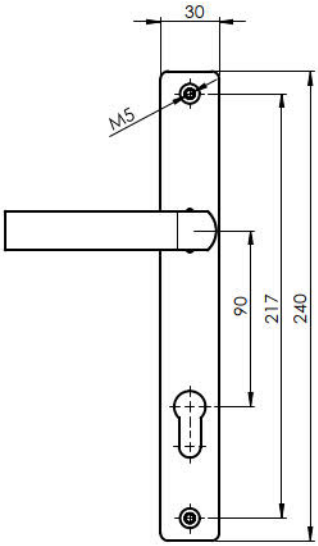

	Quality	Finish
D12/08-90	ZAMAK	RAL-black

new

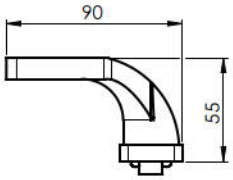

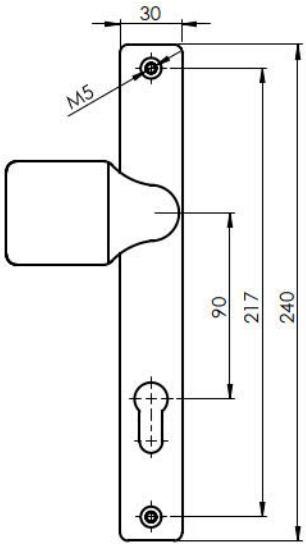

	Quality	Finish
D12/15-90	ZAMAK	RAL-black

new

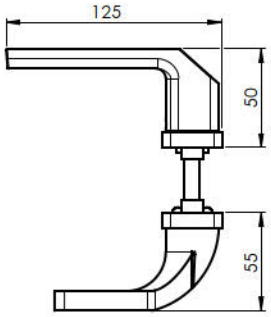

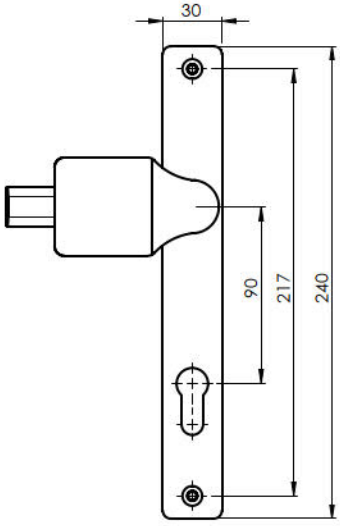

	Quality	Finish
D12/16-90	ZAMAK	RAL-black

new

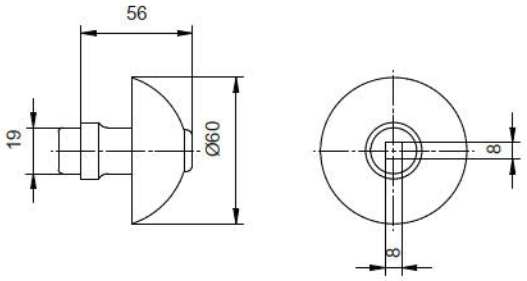

	Quality	Finish		Model	
D5/11-Fe	Fe	raw	D0/03	K12	top
D5/11-Zn		Zn	D0/05		top

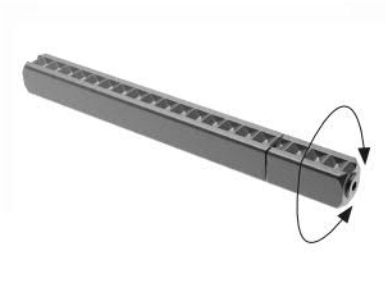

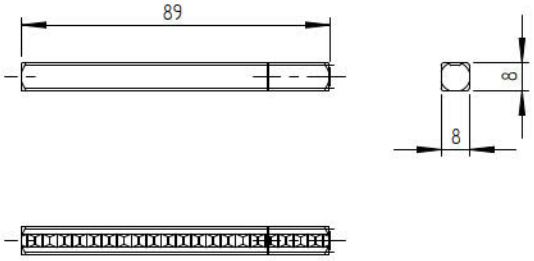

	Quality	Finish		
D0/05-Zn	Fe	raw	D5/11...	new

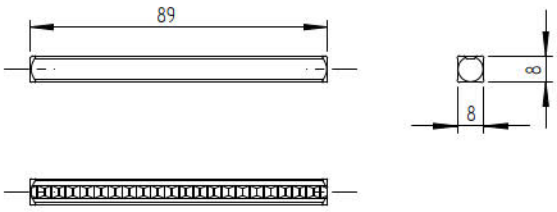

	Quality	Finish
D0/03-Zn	Fe	raw

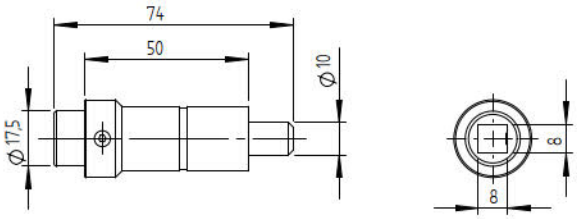

	Quality	Finish
D0/01	Fe	raw

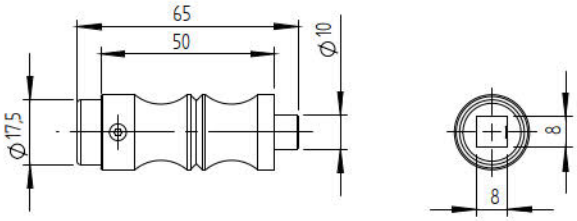

	Quality	Finish
D0/04	Fe	raw

D9/10-93x65

D9/10-93x65-INOX

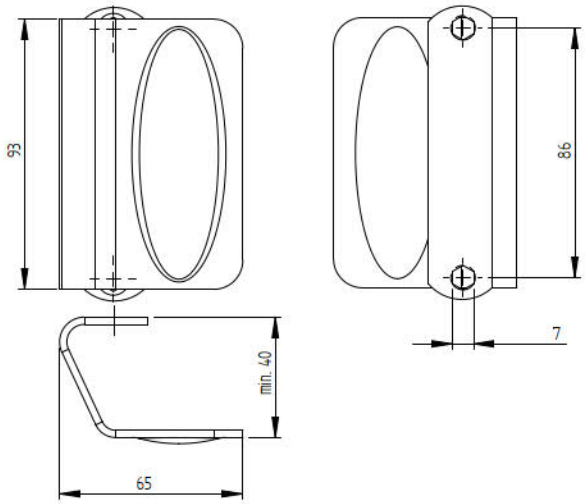

	Quality	Finish	
D9/10-93x65	Fe	raw	new
D9/10-93x65-INOX	AISI304	satin	new

D1/39F

D8/09-i

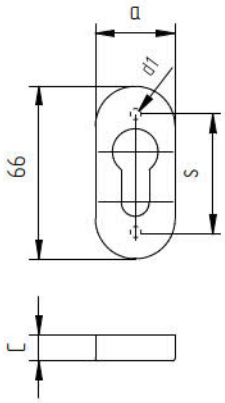

	Quality	Finish	a	s	d1	C	Model	
D1/39F	PVC	black	31	48	3,8	3,5	K02	
D8/09-i	AISI304	satin	30	50	5	10		new
D8/09-BLACK		RAL						new

D1/46K

D1/46F

D8/08-i

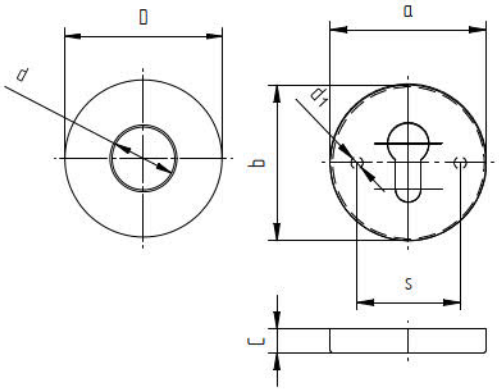

	Quality	Finish	a	b	D	s	d	d1	C	Model	
D1/46K	Fe	raw	-	-	50	-	21	-	4	K13	
D1/46F											
D8/08-i	AISI304	satin	52	52	-	38	-	5	10	K01	new

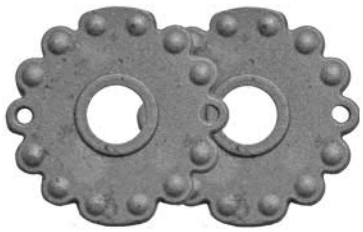

D1/32K

D1/32F

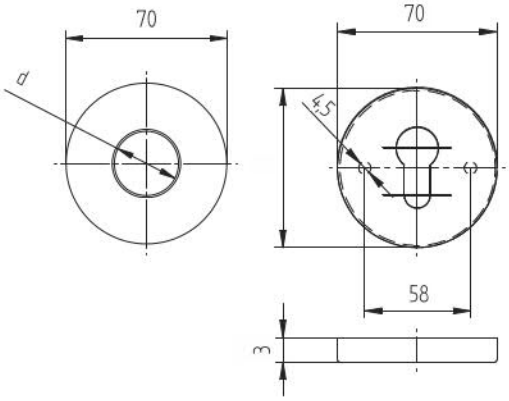

	Quality	Finish	d	Model
D1/32K	Fe	raw	18	K11, K12
D1/32F			-	

D1/55-90

D1/18-90

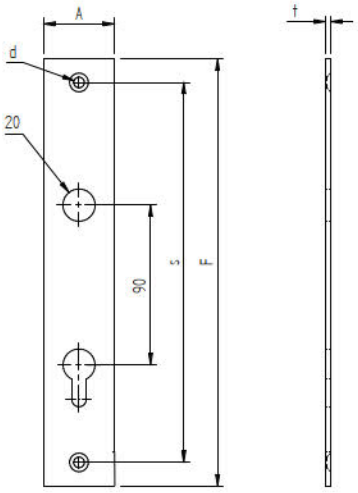

	Quality	Finish	A	F	s	d	t	Model
D1/55-90	Fe	raw	60	260	225	5	3	K13
D1/18-90			47	245	188	5,2	2	

D1/02

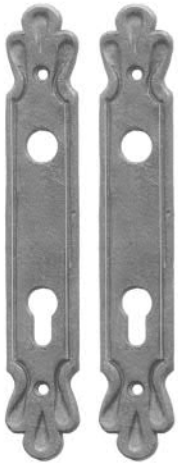

D1/19

D1/03

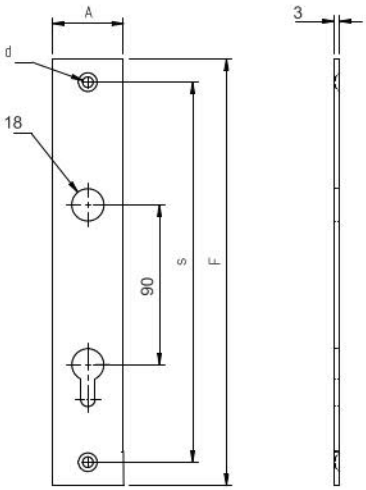

	Quality	Finish	A	F	s	d	Model	
D1/02	Fe	Zn	40	240	215	5,5	K11, K12	top
D1/19			40	278	200	6,5		
D1/03			50	240	213	6		new

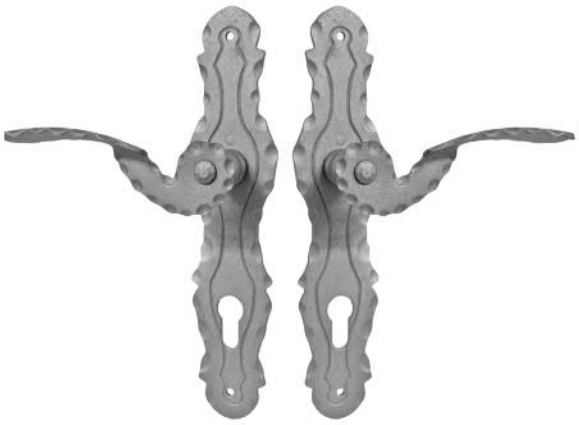

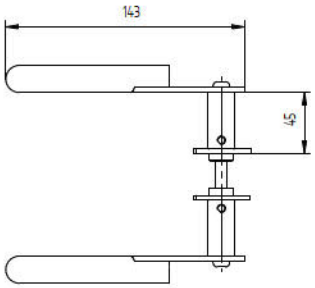

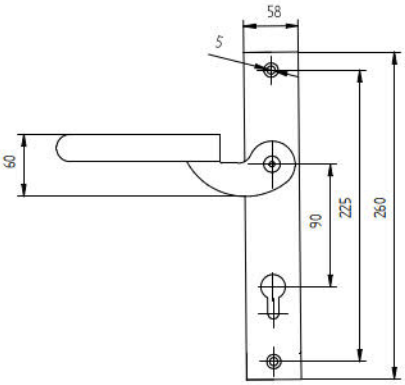

	Quality	Finish
D12/07-90	Fe	raw

D1/14AL

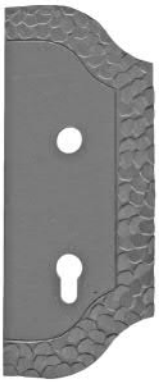

D1/14AR

D1/14A-S

D1/14A-S-T

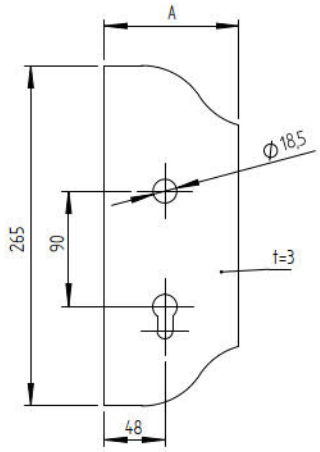

	Quality	Finish	A	Model	set
D1/14AL	Fe	raw	105	K01 - K03 K11, K12 K21 - K23	BR/30x30-set S BR/30x30-set ES
D1/14AR					
D1/14A-S			110	-	-
D1/14A-S-T					

top
top

D1/14AL-T90 D1/14AR-T90

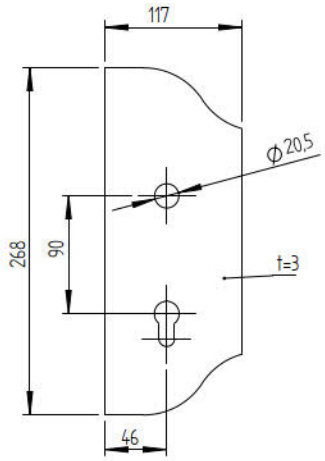

	Quality	Finish	Model
D1/14AL-T90	Fe	raw	K01 - K03 K13 K21 - K23
D1/14AR-T90			

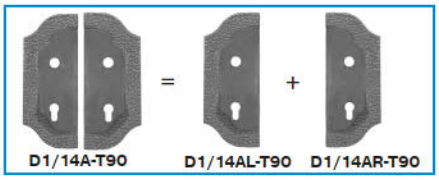

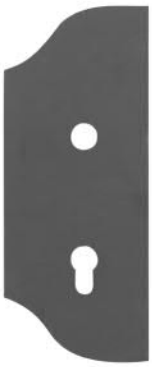

D1/14H2
D1/14H3

D1/14H3-S

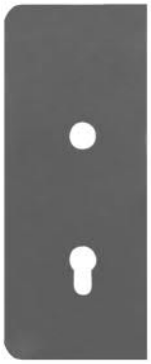

D1/65H2

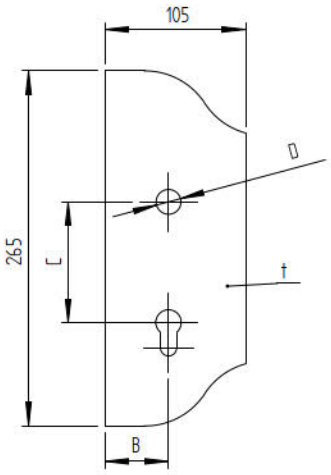

	Quality	Finish	B	C	D	t	Model
D1/14H3	Fe	raw	48	90	19	3	K01-K03, K11, K12, K21 - K23
D1/14H3-S			-	-	-		-
D1/65H2			48	90	18,5	2	K01 - K03, K11, K12, K21

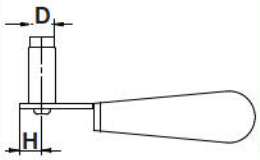

	Model	K01	K02	K03	K11	K12	K13	K14	K21	K22	K23
	D	-	-	-	D17	D17	D19	D19	-	19	D19,5
	Hmax	26	15	18	15	17	17	19	15	30	35
set	BR/30x30-set (E)				✓						
	BR/30x30-set S(E)				✓	✓					
	BR/50x30-set (E)				✓	✓					
	BR/40x40-set (E)	✓	✓	✓	✓	✓			✓		✓
	BR/60x40-set (E)	✓	✓	✓	✓	✓			✓		✓
	BR/80x40-set (E)	✓	✓	✓	✓	✓			✓		✓
	B1/52J-30x30				✓						
	B1/39J-50x30		✓		✓				✓		
	B1/52J-50x30		✓	✓	✓	✓			✓		
	B1/58J-50x30	✓	✓	✓	✓	✓			✓		
	B1/39J-40x40, B8/58J-40x40		✓		✓				✓		
	B1/58J-40x40		✓		✓				✓		
	B1/52J-40x40		✓	✓	✓	✓			✓		
	B1/60-40x40		✓	✓	✓	✓			✓		
	B1/58J-60x40	✓	✓	✓	✓	✓			✓		
	B1/59-60x40	✓	✓	✓	✓	✓			✓		
	B1/58J-80x40	✓	✓	✓	✓	✓			✓		✓
	B1/48-80x40	✓	✓	✓	✓	✓			✓		✓
	D1/14AL, D1/14AR	✓	✓	✓	✓	✓			✓	✓	✓
	D1/14H2, D1/14H3	✓	✓	✓	✓	✓			✓	✓	✓
	D1/14AL-T90, D1/14AR-T90	✓	✓	✓			✓	✓	✓	✓	✓
	D1/34-L-t2, D1/34-R-t2	✓	✓	✓			✓	✓	✓	✓	✓
	D1/35-L-90, D1/35-R-90	✓	✓	✓			✓	✓	✓	✓	✓
	D1/39F		✓								
	D8/09-i		✓								
	D1/46K, D1/46F						✓	✓		✓	
	D8/08-i	✓									
	D1/32K, D1/32F				✓	✓					
	D1/55-90						✓	✓		✓	
	D1/18-90						✓	✓		✓	
	D1/02				✓	✓					
	D1/03				✓	✓					
	D1/19				✓	✓					

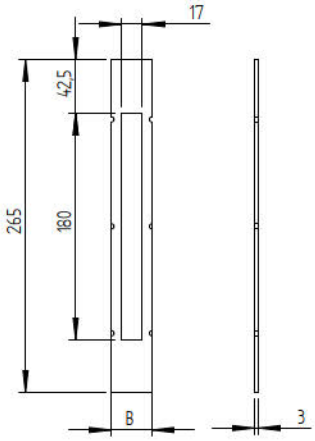

	Quality	Finish	B
B1/34-32A	Fe	raw	32
B1/34-42A			42

B1/34-32A	B1/30-50...	D1/14...	B1/33-30
B1/34-42A			B1/33-40

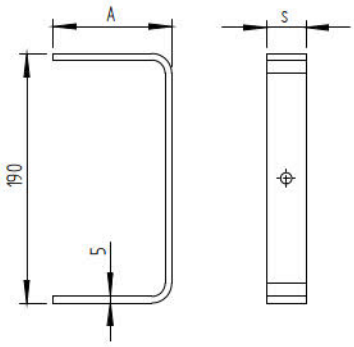

	Quality	Finish	A	s
B1/33-30	Fe	raw	90	30
B1/33-40			85	40

B1/33-30	B1/30-50...	D1/14...	B1/34-32A
B1/33-40			B1/34-42A

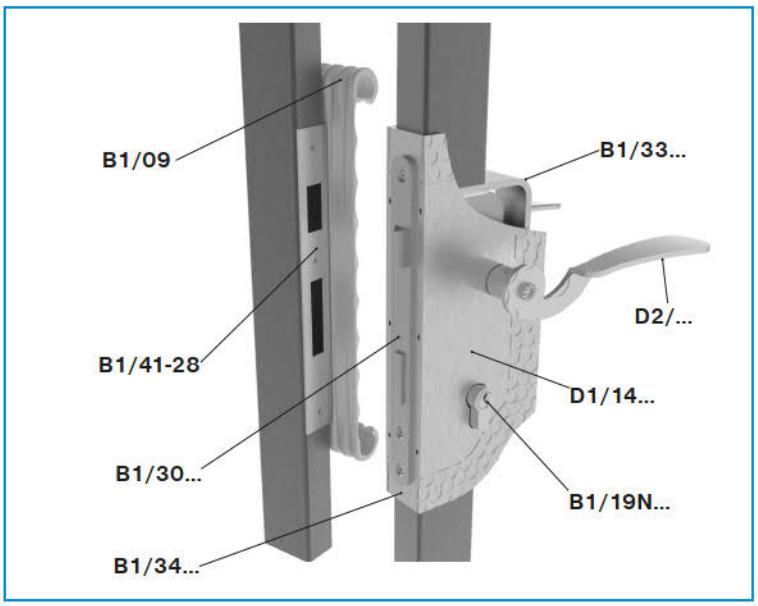

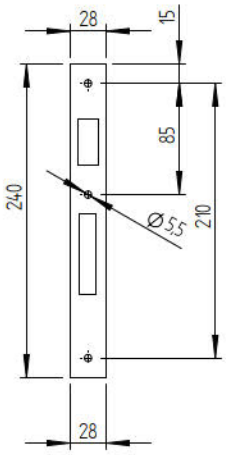

	Quality	Finish
B1/41-28	Fe	raw

B1/30-50..

B1/09-...M B1/09-...V

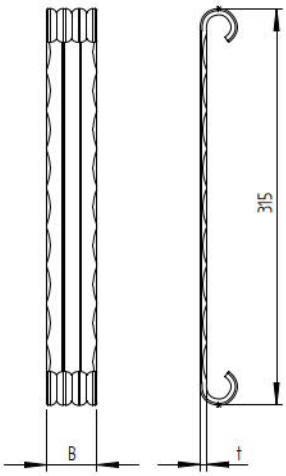

	Quality	Finish	B	t
B1/09-40M	Fe	raw	40	5
B1/09-40V				
B1/09-50M			50	
B1/09-50V				3

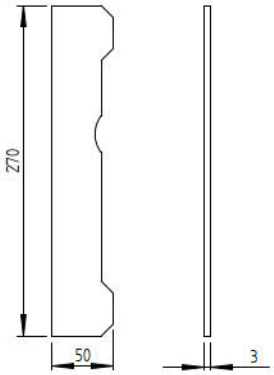

	Quality	Finish
B1/09-50H	Fe	raw
B8/09-50H	AISI304	

new
new

B1/09-50H	B1/07T...
B8/09-50H	B8/07T...

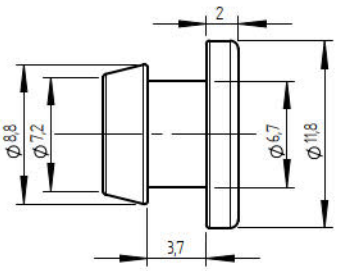

	Quality	Finish
B1/64G	RUBBER	Black

new

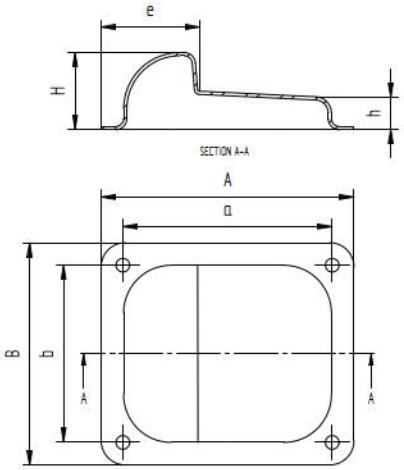

	Quality	Finish	A	a	B	b	H	h	e	
B1/32	Fe	Zn	158	130	138	110	50	22	60	top new
B8/32	AISI304	raw								
B1/32-S	Fe	Zn	120	95	100	75	42	20	45	
B8/32-S	AISI304	raw								

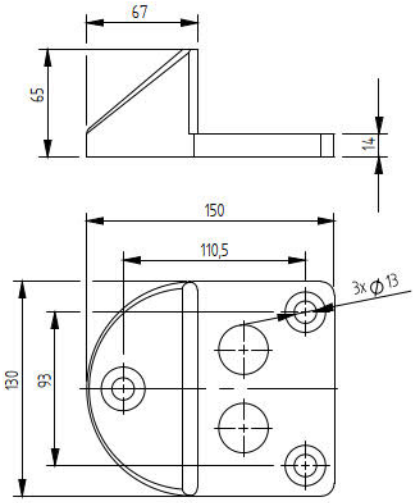

	Quality	Finish	
B1/32-G	RUBBER	Black	new

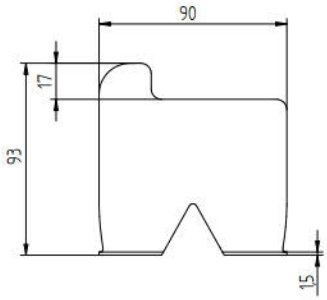

	Quality	Finish	
B1/51	Fe	Zn	new

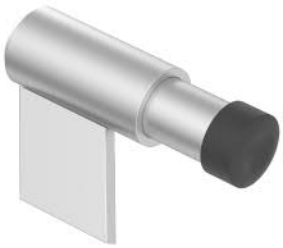

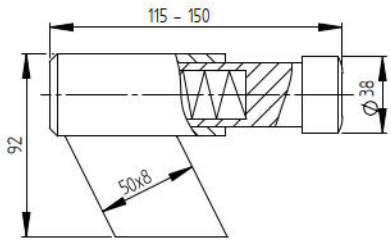

	Quality	Finish	
H/10BP-150x92-SPRING	Fe	Zn	new

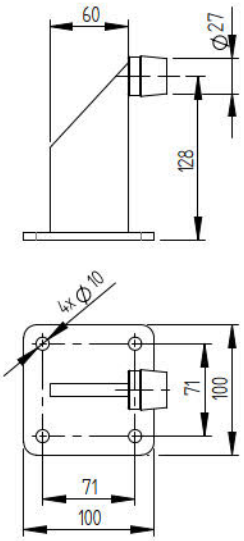

	Quality	Finish
H/10B-60x130	Fe	Zn
H8/10B-60x130	AISI304	raw

new

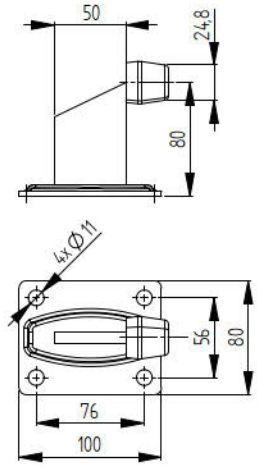

	Quality	Finish
H/10B-50x80	Fe	Zn

new

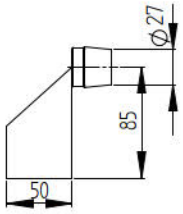

	Quality	Finish
H/10BP-50x100	Fe	Zn

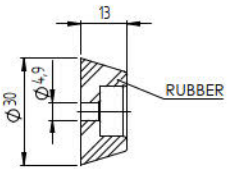

	Quality	Finish
B1/16G	RUBBER	Black

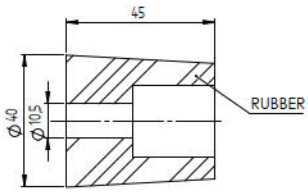

	Quality	Finish
B1/16G-B	RUBBER	Black

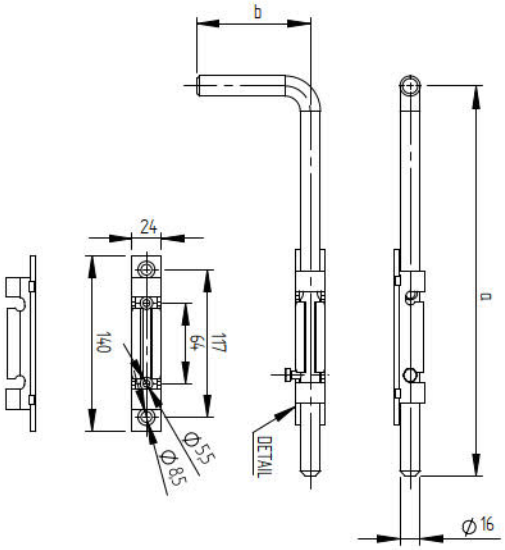

	Quality	Finish	a	b	
D7/12-200	Fe	Zn	200	82	✓
D8/12-300	AISI304	raw	300	90	
D7/12-300	Fe	Zn			
D7/12-500			500	92	

top

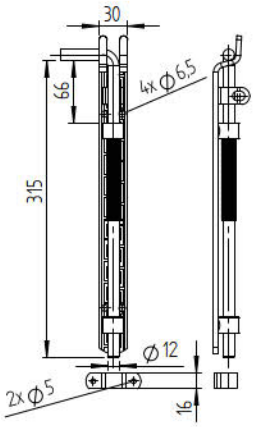

	Quality	Finish	
D7/24-315	Fe	Zn	✓

new

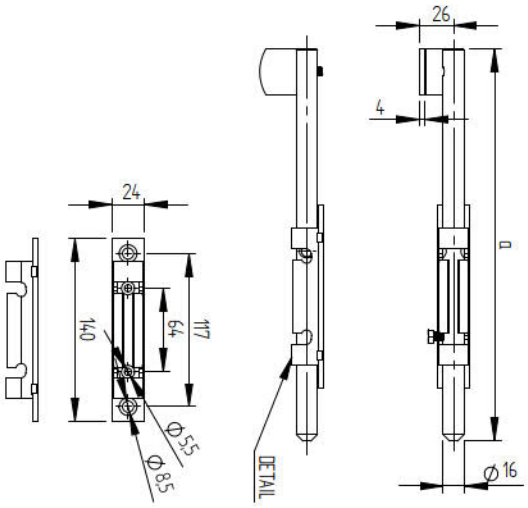

	Quality	Finish	a	
D7/19-300	Fe	Zn	300	✓
D7/19-500			500	

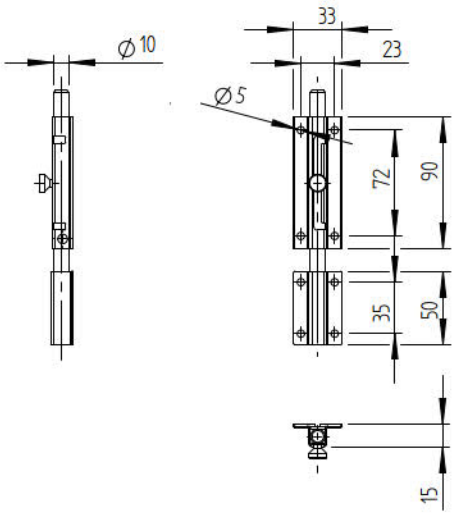

	Quality	Finish	
D7/16-150	Fe	Zn	✓

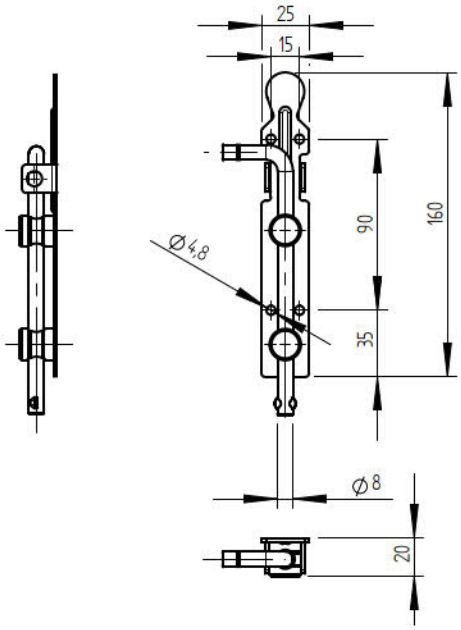

	Quality	Finish	
D7/17-160	Fe	Zn	✓

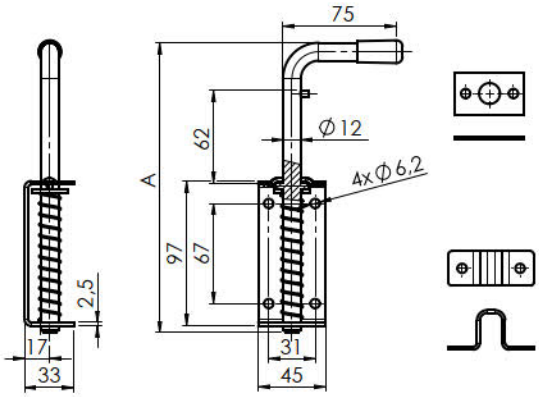

	Quality	Finish	A		
D7/25-200	Fe	Zn	200	-	new
D7/25-300			300		new
D7/25-400			500		new

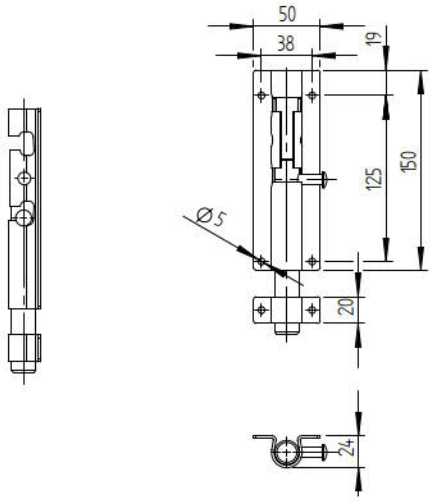

	Quality	Finish	
D7/23-150	Fe	Zn	✓

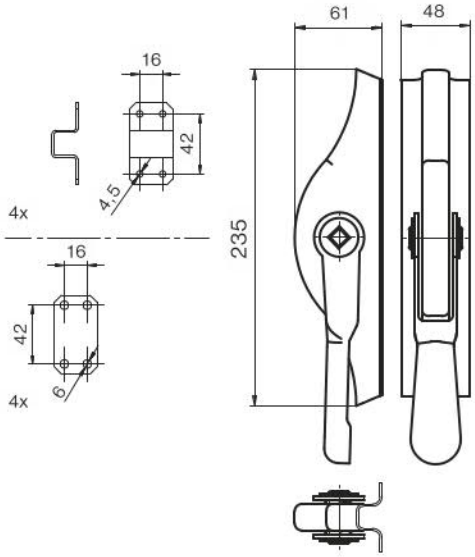

	Quality	Finish	
D7/22-235-Zn	Fe	Zn	-
D7/22-235-Fe		raw	

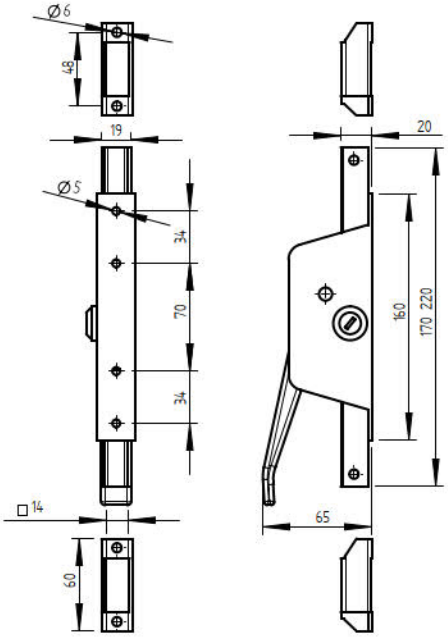

	Quality	Finish		
D7/22-160	Fe	Zn	✓	new

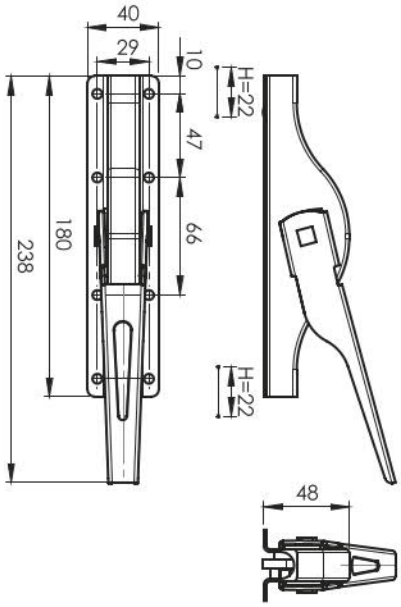

	Quality	Finish	
D7/22-180	Fe	Zn	-

new

WS/Z-101

WS/Z-104

	Quality	Finish	Norm	Dimensions	Door: ⟷ /G/°max
WS/Z-101	AL, Fe	natural	EN1154, EN:2-3	230x33x57	1200mm/65kg/120°
WS/Z-104	AISI304	satin	EN1154, EN:2-3	182x41x63	900mm/60kg/180°

6 HLINÍKOVÉ BRÁNY
ALUMINIUM GATES

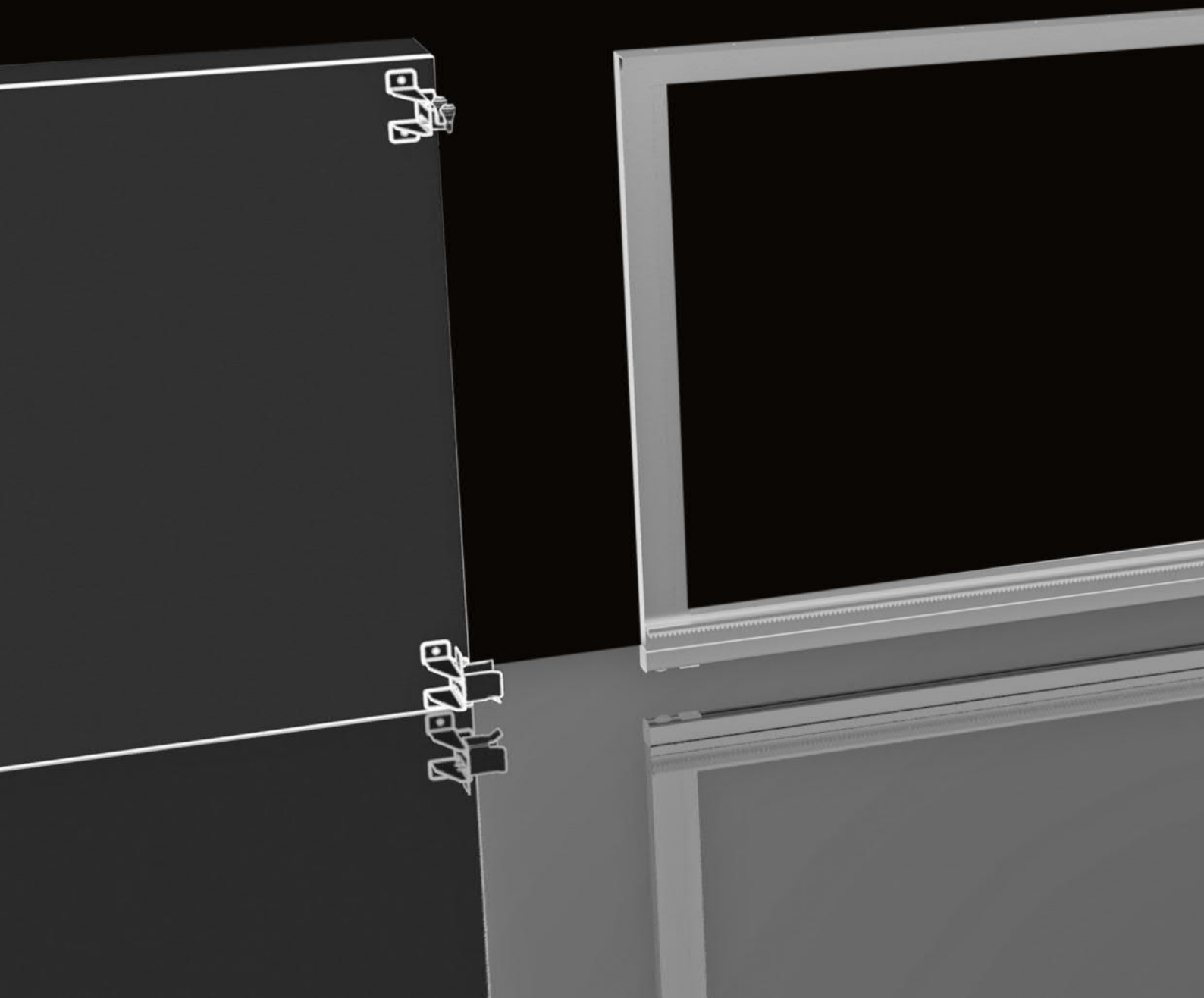

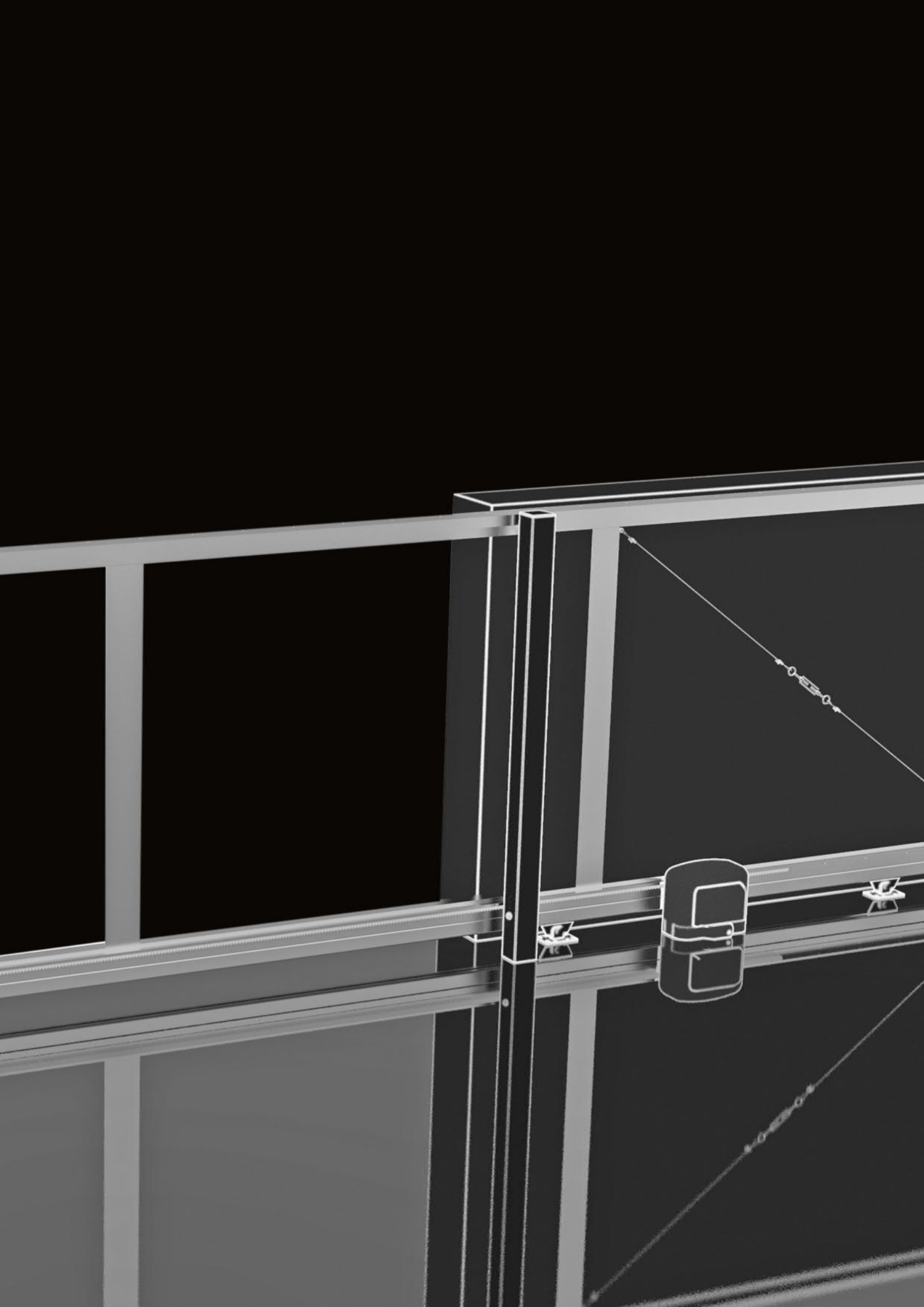

MODEL Al 90x95 L4m/G≤200kg					
	SV-90x95-AL-ECO				H/02-90x95-AL-6000
SV-90x95-AL-ECO	2x	1x	1x	2x	-
SV-90x95-AL	2x	1x	1x	2x	1x

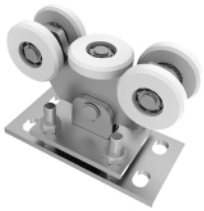

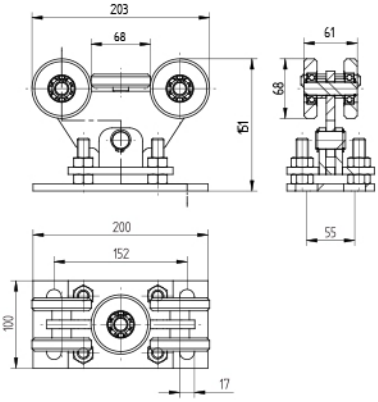

	Quality	Finish
H/34-4-80x80-NYLON	Fe	Zn

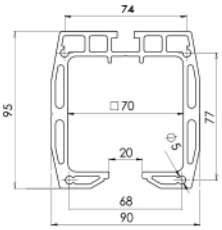

	Quality	Finish
H/02-90x95-AL-6000	ALUMINIUM	natural

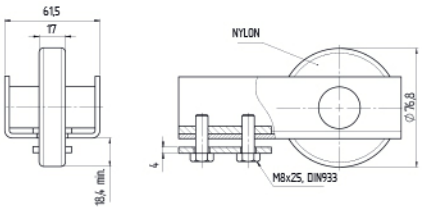

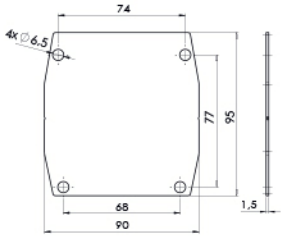

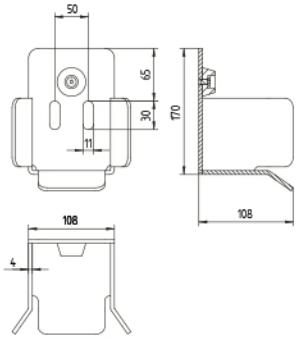

	Quality	Finish
H/15P-100	Fe	Zn

	Quality	Finish
H8/12-2S	AISI304	raw

	Quality	Finish
H8/04-22-W	AISI304	raw

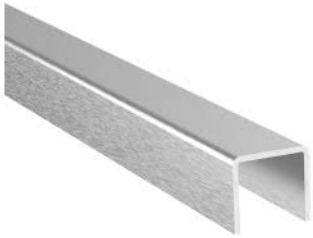

	Quality	Finish
A/6900-020	AISI304	raw

	Quality	Finish
H8/12-4T	AISI304	raw

	Quality	Finish
H8/53	AISI304	raw

	Quality	Finish
H8/37-60P	AISI304	raw

	Quality	Finish
H8/16-46x130	AISI304	raw

	Quality	Finish
H8/10B-60x130	AISI304	raw

	G max	G opt
ROAD400-ZKIT	400kg	200kg

	Quality	Finish
H/01PVC-AL	NYLON	raw

	Quality	Finish
H/01PVC-AL-K	ALUMINIUM	natural

	Use	D	t	d
Q1/B01-125x6	Fe	125	6	22,2

	Use	D	t	d	K
Q1/L01-125-40	INOX	125	7,25	22,2	40
Q1/L01-125-80					80
Q1/L01-125-120					120
Q1/L01-125A	Fe		8,3		40

	Use	D	t	d
Q1/R01-125x1,6	Fe	125	1,6	22,2
Q1/RN01-125x1	INOX		1	

	Use	D	t	d	
Q1/D01-125x22,2x10	stone/ concrete	125	2	22,5	new
Q1/D01-230x22,2x10		230			new

	Quality	M	L
A-DIN 1587-A2 M6	INOX	6	12
A-DIN 1587-A2 M8		8	14,7
A-DIN 1587-A2 M10		10	17,7
A-DIN 1587-A2 M12		12	22

	Quality	M	L
A-DIN 917 M8	INOX	8	
A-DIN 917 M10		10	

	Quality	M	L
A-DIN 934 M8	INOX	8	6,3
A-DIN 934 M10		10	7,7

	Quality	Finish	
Q5/09-Quick-Fix QF5	Fe	Zn	new

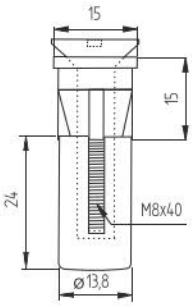

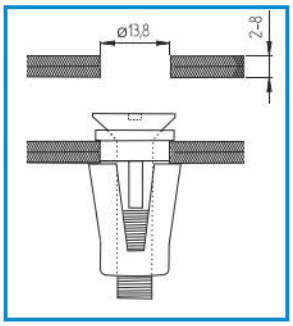

	Quality	Finish	
Q5/10-Boxbolt M8x50QF5	Fe	Zn	new

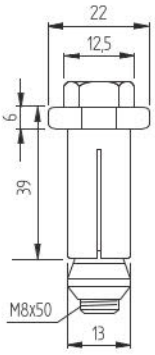

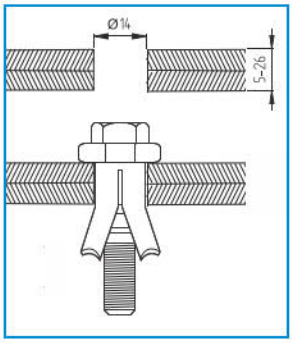

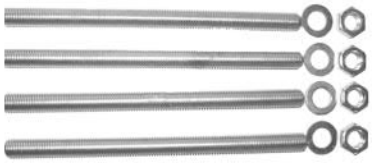

	Quality	M	L
H/55-M16x250	Zn	16	250

	Quality	M	L
A19/27-M8	INOX	8	140
A19/27-M10		10	

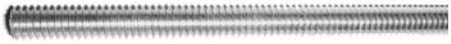

	Quality	M	L
A-DIN 975 M6	INOX	6	1000
A-DIN 975 M8		8	
A-DIN 975 M10		10	

	Quality	M	L
A-DIN 6334V M8x25-A2	INOX	8	25
A-DIN 6334V M10x25-A2		10	25

B2/...30x5

B2/...12x6

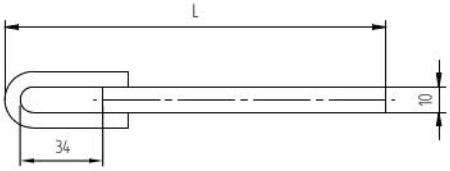

	Quality	L
B2/01R-12x6	Zn	155
B2/01R-30x5		153

	ml
A/spray-WS	400

	Quality	ml	-20°C
Q5/01GF-300	Vinylester	300	
Q5/01GF-300 Nordic			✓
Q5/01GFP-300	Polyester		
Q5/01TK-300	Vinylester	400	
Q5/01TK-300 Winter			✓
Q5/01GF-400			
Q5/01GF-400 Nordic			✓
Q5/01GFP-400	Polyester		
Q5/01TK-400	Vinylester		
Q5/01TK-400 Winter			✓

	Quality	Finish	ml
J08/03-Zn gray	90% Zn	gray	400
J08/03-Zn polish		polish	

	Quality	M	L
Q5/04	PVC	17	215

art.
KAT-GATES-2021-22

art.
KAT-FORGED-2020-21

art.
KAT-RAILING SYSTEMS-2021-22

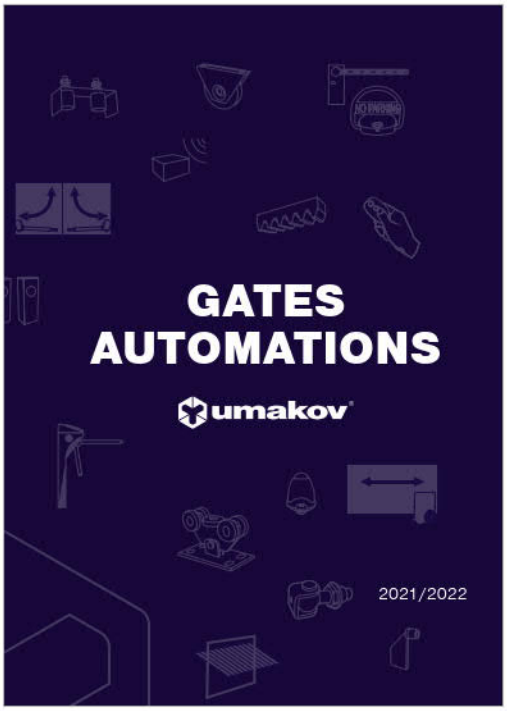

art.
KAT-AUTOMATIONS-2021-22

umakov.sk

+421 51 488 19 00
info@umakov.sk

umakov.sk
objednavky@umakov.sk

+421 908 944 153
+421 910 262 707
+421 908 986 081

SERVIS
+421 910 262 820
+421 911 383 645
servis@umakov.sk

REKLAMÁCIE
+421 911 915 952
reklamacie@umakov.sk

ÚČTOVNÉ ODDELENIE
+421 911 080 261
+421 911 750 326
uctovne@umakov.sk

MARKETING
+421 915 781 139
marketing@umakov.sk

KROMPACHY
Hornádska 337
053 42
+421 911 455 347
krompachy@umakov.sk

BRATISLAVA
Rožňavská 1
831 04
+421 917 739 412
+421 904 644 378
ba@umakov.sk

BANSKÁ BYSTRICA
Zvolenská cesta 17
974 05
+421 905 304 548
bb@umakov.sk

umakov.cz

+ 420 212 240 751
info@umakov.cz

umakov.cz
objednavky@umakov.cz

+420 608 743 164
+420 775 455 079
+420 608 313 799

SERVIS
+420 778 001 899
+420 775 455 079
+420 775 061 735
servis@umakov.cz

REKLAMACE
+421 911 915 952
reklamace@umakov.cz

ÚČETNÍ ODDELĚNÍ
+420 778 065 444
+420 608 313 799
ucetni@umakov.cz

PRAHA - OTICE
Otice 40
251 63 Strančice
+420 608 313 799
praha@umakov.cz

ŘÍČANY U BRNA
Nám. Osvobození 63
664 82
+420 608 743 164
+420 731 733 989
brno@umakov.cz

HRADEC KRÁLOVÉ
Náchodská 607
503 01
+420 778 001 899
+420 774 338 660
hk@umakov.cz

umakow.pl

+48 32 202 19 29
info@umakow.pl

umakow.pl
zamowienie@umakow.pl

+48 517 534 197
+48 500 110 199
+48 668 494 940

GDAŃSK
Pomorskie
Warmińsko-mazurskie
Kujawsko-pomorskie
Zachodniopomorskie
+48 735 419 155
+48 538 110 766
gdansk@umakow.pl

RADOM
Podlaskie
Lubelskie
Mazowieckie
Świętokrzyskie
Łódzkie
+48 664 855 695
radom@umakow.pl

NOWY SACZ
Małopolskie
Podkarpackie
Śląskie
+48 510 696 236
nowysacz@umakow.pl

POZNAŃ
Lubuskie
Wielkopolskie
Dolnotłąskie
Opolskie
+48 602 335 611
poznan@umakow.pl

ZABRZE
A. Pawliczka 27A
41-800
+48 517 534 197
umakow@umakow.pl

umakov.hu

+36 28 920 870
info@umakov.hu

umakov.hu
megrendeles@umakov.hu

+ 36 306 446 653
+ 36 305 754 157
+ 36 307 572 009

BUDAPEST
Csonka János út.1
2142 Nagytarcsa
+ 36 305 662 474
hungary3@umakov.hu

umakovshop.com
+421 915 093 533
europe@umakovshop.com

umakov.de
+ 421 907 684 761
umakov@umakov.de

umakov.it
+ 39 348 349 0444
umakov@umakov.it